USB3.0 Cameras



Key Features

Camera Standard
- GenICam, USB3Vision
Plug & Play
eBus Driver

Pin map

6pin Connector

Pin	Name	IN/OUT	Remark
1	Power	IN	5V ~ 13.2V Input Range
2	Trigger	IN	Opto-Isolated Trigger Input+(2.5V~24V)
3	GPIO1	IN/OUT	General Purpose I/O 1
4	GPIO2	IN/OUT	General Purpose I/O 2
5	Trigger	IN	Opto-Isolated Trigger Input-
6	GND	IN	

Back Pannel

Pin	Name	Remark
1	USB3.1 Gen.1 Connector	Type Micro-B
2	Power & I/O Connector	6Pin Circular
3	LED Indicator	LED

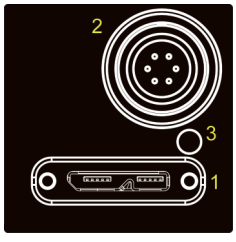

Dimension (Unit : mm)

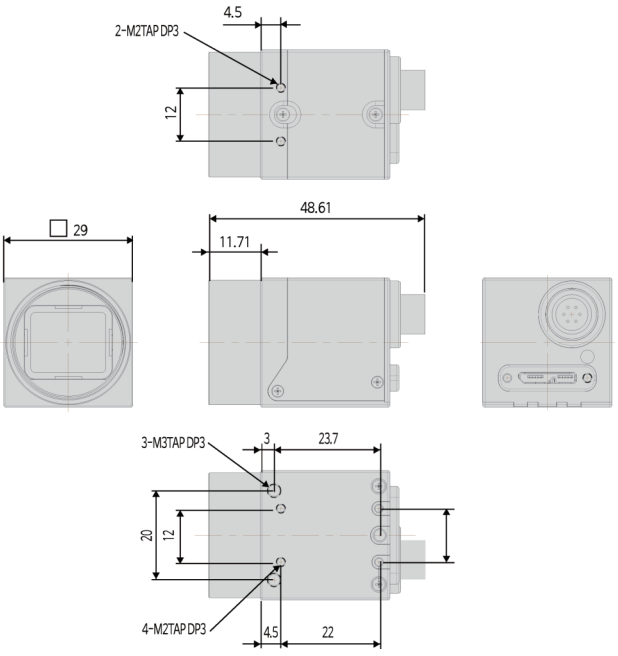

Download (File name)

ex) SDK download:
CREVIS Site ▶ Search window ▶ File name

SDK : MCamU_Basic.zip

Model		MU-A040M-523	MU-A040K-523
Sensor		Sony CMOS Pregius IMX287	
Sensor size		1/2.9"	
Pixel size (㎛)		6.9 x 6.9	
Resolution		728 x 544	
Frame Rate (Max.)		523fps	
Color / Mono		Mono Chrome	Color
Scanning method		Full / ROI (Horizontal + Vertical) / Reverse (X,Y,All)	
Synchronization		Internal (Freerun), External, Software trigger via PC	
Trigger modes		Fixed shutter, Pulse width shutter	
Shutter		Global	
Shutter speed		1us ~ 3sec (Exposure Offset : 별도)	
Gain		Analog : 0dB ~ 27.6dB (1x ~ 24x) Digital : 0dB ~ 18dB (1x ~ 8x)	
Black level		Analog : 0 ~ 255 (8bit) / Digital : 0 ~ 4095 (12bit)	
Gamma / LUT		Gamma Correction, Adjustable LUT (12bit to 12bit)	
Auto white balance		Off / Once / Continuous (Only Color Models)	
Auto gain / exposure		Off / Once / Continuous	
Interface		USB3.1 Gen. 1 (USB3 Vision Standard 1.1)	
Pixel Data Format		Mono8/10/12	Mono8/10/12, BayerRG8/10/12, RGB8
SNR		35dB	
Function control		GainAuto, ExposureAuto, BalanceWhiteAuto, Acquisition Frame Rate (Adjustable), Line Debouncer, Defective Pixel Correction, Shading Correction (FFC), Color Transformation Control, NoiseReduction	
Lens mount		C mount	
Power requirements		DC 5V ~ 13.2V ± 10% or USB3 Bus	
Consumption	DC	< 3.3W	
	USB	< 3.3W (Max.)	
Weight		< 44g	
Dimension (mm)		29 x 29 x 29 (without mount)	
Temperature		0℃ ~ 40℃ (Operating) / -20℃ ~ 60℃ (Storage)-(with < 20 ~ 80% RH)	
Vibration / Shock		98m/s^2 (10G) / 196m/s^2 (20.0G)	
Standard compliancy		CE (EN61326-1:2013년; Class A)	
Conformity		RoHS, WEEE, UL, FCC	
Warranty		3 years	

Subject to change without notice

Model		MU-A160M-226	MU-A160K-226
Sensor		Sony CMOS Pregius IMX273	
Sensor size		1/2.9"	
Pixel size (㎛)		3.45 x 3.45	
Resolution		1456 x 1088	
Frame Rate (Max.)		226fps	
Color / Mono		Mono Chrome	Color
Scanning method		Full / ROI (Horizontal + Vertical) / Reverse (X,Y,All) / Decimation (X,Y,All) / Binning (Only Mono Model)	
Synchronization		Internal (Freerun), External, Software trigger via PC	
Trigger modes		Fixed shutter, Pulse width shutter	
Shutter		Global	
Shutter speed		1us ~ 3sec (Exposure Offset : 별도)	
Gain		Analog : 0dB ~ 27.6dB (1x ~ 24x) Digital : 0dB ~ 18dB (1x ~ 8x)	
Black level		Analog : 0 ~ 255 (8bit) / Digital : 0 ~ 4095 (12bit)	
Gamma / LUT		Gamma Correction, Adjustable LUT (12bit to 12bit)	
Auto white balance		Off / Once / Continuous (Only Color Models)	
Auto gain / exposure		Off / Once / Continuous	
Interface		USB3.1 Gen. 1 (USB3 Vision Standard 1.1)	
Pixel Data Format		Mono8/10/12	Mono8/10/12, BayerRG8/10/12, RGB8
SNR		38dB	
Function control		GainAuto, ExposureAuto, BalanceWhiteAuto, Acquisition Frame Rate (Adjustable), Line Debouncer, Defective Pixel Correction, Shading Correction (FFC), Color Transformation Control, NoiseReduction	
Lens mount		C mount	
Power requirements		DC 5V ~ 13.2V ± 10% or USB3 Bus	
Consumption	DC	< 3.2W	
	USB	< 3.7W (Max.)	
Weight		< 44g	
Dimension (mm)		29 x 29 x 29 (without mount)	
Temperature		0℃ ~ 40℃ (Operating) / -20℃ ~ 60℃ (Storage)-(with < 20 ~ 80% RH)	
Vibration / Shock		98m/s^2 (10G) / 196m/s^2 (20.0G)	
Standard compliancy		CE (EN61326-1:2013년; Class A)	
Conformity		RoHS, WEEE, UL, FCC	
Warranty		3 years	

Model		MU-A320M-118	MU-A320K-118
Sensor		Sony CMOS Pregius IMX252	
Sensor size		1/1.8”	
Pixel size (㎛)		3.45 x 3.45	
Resolution		2064 x 1544	
Frame Rate (Max.)		118fps	
Color / Mono		Mono Chrome	Color
Scanning method		Full / ROI (Horizontal + Vertical) / Reverse (X,Y,All) / Decimation (X,Y,All) / Binning (Only Mono Model)	
Synchronization		Internal (Freerun), External, Software trigger via PC	
Trigger modes		Fixed shutter, Pulse width shutter	
Shutter		Global	
Shutter speed		1us ~ 3sec (Exposure Offset : 별도)	
Gain		Analog : 0dB ~ 27.6dB (1x ~ 24x) Digital : 0dB ~ 18dB (1x ~ 8x)	
Black level		Analog : 0 ~ 255 (8bit) / Digital : 0 ~ 4095 (12bit)	
Gamma / LUT		Gamma Correction, Adjustable LUT (12bit to 12bit)	
Auto white balance		Off / Once / Continuous (Only Color Models)	
Auto gain / exposure		Off / Once / Continuous	
Interface		USB3.1 Gen. 1 (USB3 Vision Standard 1.1)	
Pixel Data Format		Mono8/10/12	Mono8/10/12, BayerRG8/10/12, RGB8
SNR		36dB	
Function control		GainAuto, ExposureAuto, BalanceWhiteAuto, Acquisition Frame Rate (Adjustable), Line Debouncer, Defective Pixel Correction, Shading Correction (FFC), Color Transformation Control, NoiseReduction	
Lens mount		C mount	
Power requirements		DC 5V ~ 13.2V ± 10% or USB3 Bus	
Consumption	DC	< 4.0W	
	USB	< 4.7W (Max.)	
Weight		< 44g	
Dimension (mm)		29 x 29 x 29 (without mount)	
Temperature		0℃ ~ 40℃ (Operating) / -20℃ ~ 60℃ (Storage)-(with < 20 ~ 80% RH)	
Vibration / Shock		98m/s^2 (10G) / 196m/s^2 (20.0G)	
Standard compliancy		CE (EN61326-1:2013년; Class A)	
Conformity		RoHS, WEEE, UL, FCC	
Warranty		3 years	

Subject to change without notice

Model		MU-A320M-55	MU-A320K-55
Sensor		Sony CMOS Pregius IMX265	
Sensor size		1/1.8”	
Pixel size (㎛)		3.45 x 3.45	
Resolution		2064 x 1544	
Frame Rate (Max.)		55fps	
Color / Mono		Mono Chrome	Color
Scanning method		Full / ROI (Horizontal + Vertical) / Reverse (X,Y,All) / Decimation (X,Y,All)	
Synchronization		Internal (Freerun), External, Software trigger via PC	
Trigger modes		Fixed shutter, Pulse width shutter	
Shutter		Global	
Shutter speed		1us ~ 3sec (Exposure Offset : 별도)	
Gain		Analog : 0dB ~ 27.6dB (1x ~ 24x) Digital : 0dB ~ 18dB (1x ~ 8x)	
Black level		Analog : 0 ~ 255 (8bit) / Digital : 0 ~ 4095 (12bit)	
Gamma / LUT		Gamma Correction, Adjustable LUT (12bit to 12bit)	
Auto white balance		Off / Once / Continuous (Only Color Models)	
Auto gain / exposure		Off / Once / Continuous	
Interface		USB3.1 Gen. 1 (USB3 Vision Standard 1.1)	
Pixel Data Format		Mono8/10/12	Mono8/10/12, BayerRG8/10/12, RGB8
SNR		39dB	
Function control		GainAuto, ExposureAuto, BalanceWhiteAuto, Acquisition Frame Rate (Adjustable), Line Debouncer, Defective Pixel Correction, Shading Correction (FFC), Color Transformation Control, NoiseReduction	
Lens mount		C mount	
Power requirements		DC 5V ~ 13.2V ± 10% or USB3 Bus	
Consumption	DC	< 3.1W	
	USB	< 3.4W (Max.)	
Weight		< 44g	
Dimension (mm)		29 x 29 x 29 (without mount)	
Temperature		0℃ ~ 40℃ (Operating) / -20℃ ~ 60℃ (Storage)-(with < 20 ~ 80% RH)	
Vibration / Shock		98m/s^2 (10G) / 196m/s^2 (20.0G)	
Standard compliancy		CE (EN61326-1:2013년; Class A)	
Conformity		RoHS, WEEE, UL, FCC	
Warranty		3 years	

Model		MU-A500M-35	MU-A500K-35
Sensor		Sony CMOS Pregius IMX264	
Sensor size		2/3"	
Pixel size (㎛)		3.45 x 3.45	
Resolution		2464 x 2056	
Frame Rate (Max.)		35fps	
Color / Mono		Mono Chrome	Color
Scanning method		Full / ROI (Horizontal + Vertical) / Reverse (X,Y,All) / Decimation (X,Y,All)	
Synchronization		Internal (Freerun), External, Software trigger via PC	
Trigger modes		Fixed shutter, Pulse width shutter	
Shutter		Global	
Shutter speed		1us ~ 3sec (Exposure Offset : 별도)	
Gain		Analog : 0dB ~ 27.6dB (1x ~ 24x) Digital : 0dB ~ 18dB (1x ~ 8x)	
Black level		Analog : 0 ~ 255 (8bit) / Digital : 0 ~ 4095 (12bit)	
Gamma / LUT		Gamma Correction, Adjustable LUT (12bit to 12bit)	
Auto white balance		Off / Once / Continuous (Only Color Models)	
Auto gain / exposure		Off / Once / Continuous	
Interface		USB3.1 Gen. 1 (USB3 Vision Standard 1.1)	
Pixel Data Format		Mono : Mono8/10/12	Color : Mono8/10/12, BayerRG8/10/12, RGB8
SNR		38dB	
Function control		GainAuto, ExposureAuto, BalanceWhiteAuto, Acquisition Frame Rate (Adjustable), Line Debouncer, Defective Pixel Correction, Shading Correction (FFC), Color Transformation Control, NoiseReduction	
Lens mount		C mount	
Power requirements		DC 5V ~ 13.2V ± 10% or USB3 Bus	
Consumption	DC	< 3.2W	
	USB	< 3.4W (Max.)	
Weight		< 44g	
Dimension (mm)		29 x 29 x 29 (without mount)	
Temperature		0℃ ~ 40℃ (Operating) / -20℃ ~ 60℃ (Storage)-(with < 20 ~ 80% RH)	
Vibration / Shock		98m/s^2 (10G) / 196m/s^2 (20.0G)	
Standard compliancy		CE (EN61326-1:2013년; Class A)	
Conformity		RoHS, WEEE, UL, FCC	
Warranty		3 years	

Subject to change without notice

Model		MU-A121M-23	MU-A121K-23
Sensor		Sony CMOS Pregius IMX304	
Sensor size		1.1”	
Pixel size (㎛)		3.45 x 3.45	
Resolution		4112 x 3008	
Frame Rate (Max.)		23fps	
Color / Mono		Mono Chrome	Color
Scanning method		Full / ROI (Horizontal + Vertical) / Reverse (X,Y,All) / Decimation (X,Y,All)	
Synchronization		Internal (Freerun), External, Software trigger via PC	
Trigger modes		Fixed shutter, Pulse width shutter	
Shutter		Global	
Shutter speed		1us ~ 3sec (Exposure Offset : 별도)	
Gain		Analog : 0dB ~ 27.6dB (1x ~ 24x) Digital : 0dB ~ 18dB (1x ~ 8x)	
Black level		Analog : 0 ~ 255 (8bit) / Digital : 0 ~ 4095 (12bit)	
Gamma / LUT		Gamma Correction, Adjustable LUT (12bit to 12bit)	
Auto white balance		Off / Once / Continuous (Only Color Models)	
Auto gain / exposure		Off / Once / Continuous	
Interface		USB3.1 Gen. 1 (USB3 Vision Standard 1.1)	
Pixel Data Format		Mono8/10/12	Mono8/10/12, BayerRG8/10/12, RGB8
SNR		38dB	
Function control		GainAuto, ExposureAuto, BalanceWhiteAuto, Acquisition Frame Rate (Adjustable), Line Debouncer, Defective Pixel Correction, Shading Correction (FFC), Color Transformation Control, NoiseReduction	
Lens mount		C mount	
Power requirements		DC 5V ~ 13.2V ± 10% or USB3 Bus	
Consumption	DC	< 3.6W	
	USB	< 3.9W (Max.)	
Weight		< 44g	
Dimension (mm)		29 x 29 x 29 (without mount)	
Temperature		0℃ ~ 40℃ (Operating) / -20℃ ~ 60℃ (Storage)-(with < 20 ~ 80% RH)	
Vibration / Shock		98m/s^2 (10G) / 196m/s^2 (20.0G)	
Standard compliancy		CE (EN61326-1:2013년; Class A)	
Conformity		RoHS, WEEE, UL, FCC	
Warranty		3 years	

Model		MU-A121R-31	MU-A121L-31
Sensor		Sony CMOS Starvis IMX226	
Sensor size		1/1.7”	
Pixel size (㎛)		1.85 x 1.85	
Resolution		4072 x 3046	
Frame Rate (Max.)		31fps	
Color / Mono		Mono Chrome	Color
Scanning method		Full / ROI (Horizontal + Vertical) / Reverse (X,Y,All)	
Synchronization		Internal (Freerun), External, Software trigger via PC	
Trigger modes		Fixed shutter, Pulse width shutter	
Shutter		Rolling, Global Reset	
Shutter speed		99us ~ 3sec	
Gain		Analog : 0dB ~ 27.6dB (1x ~ 22.5x) Digital : 0dB ~ 18dB (1x ~ 8x)	
Black level		Analog : 0 ~ 255 (8bit) / Digital : 0 ~ 4095 (12bit)	
Gamma / LUT		Gamma Correction, Adjustable LUT (12bit to 12bit)	
Auto white balance		Off / Once / Continuous (Only Color Models)	
Auto gain / exposure		Off / Once / Continuous	
Interface		USB3.1 Gen. 1 (USB3 Vision Standard 1.1)	
Pixel Data Format		Mono8/10/12	Mono8/10/12, BayerRG8/10/12, RGB8
SNR		36dB	
Function control		GainAuto, ExposureAuto, BalanceWhiteAuto, Acquisition Frame Rate (Adjustable), Line Debouncer, Defective Pixel Correction, Shading Correction (FFC), Color Transformation Control, NoiseReduction	
Lens mount		C mount	
Power requirements		DC 5V ~ 13.2V ± 10% or USB3 Bus	
Consumption	DC	< 3.6W	
	USB	< 3.8W (Max.)	
Weight		< 44g	
Dimension (mm)		29 x 29 x 29 (without mount)	
Temperature		0℃ ~ 40℃ (Operating) / -20℃ ~ 60℃ (Storage)-(with < 20 ~ 80% RH)	
Vibration / Shock		98m/s^2 (10G) / 196m/s^2 (20.0G)	
Standard compliancy		CE (EN61326-1:2013년; Class A)	
Conformity		RoHS, WEEE, UL, FCC	
Warranty		3 years	

Subject to change without notice

Model		MU-A201R-18	MU-A201L-18
Sensor		Sony CMOS Starvis IMX183	
Sensor size		1”	
Pixel size (㎛)		2.4 x 2.4	
Resolution		5496 x 3672	
Frame Rate (Max.)		18fps	
Color / Mono		Mono Chrome	Color
Scanning method		Full / ROI (Horizontal + Vertical) / Reverse (X,Y,All)	
Synchronization		Internal (Freerun), External, Software trigger via PC	
Trigger modes		Fixed shutter, Pulse width shutter	
Shutter		Rolling, Global Reset	
Shutter speed		141us ~ 3sec	
Gain		Analog : 0dB ~ 27.6dB (1x ~ 22.5x) Digital : 0dB ~ 18dB (1x ~ 8x)	
Black level		Analog : 0 ~ 255 (8bit) / Digital : 0 ~ 4095 (12bit)	
Gamma / LUT		Gamma Correction, Adjustable LUT (12bit to 12bit)	
Auto white balance		Off / Once / Continuous	
Auto gain / exposure		Off / Once / Continuous	
Interface		USB3.1 Gen. 1 (USB3 Vision Standard 1.1)	
Pixel Data Format		Mono8/10/12	Mono8/10/12, BayerRG8/10/12, RGB8
SNR		41dB	
Function control		GainAuto, ExposureAuto, BalanceWhiteAuto, Acquisition Frame Rate (Adjustable), Line Debouncer, Defective Pixel Correction, Shading Correction (FFC), Color Transformation Control, NoiseReduction	
Lens mount		C mount	
Power requirements		DC 5V ~ 13.2V ± 10% or USB3 Bus	
Consumption	DC	< 4.0W	
	USB	< 4.0W (Max.)	
Weight		< 44g	
Dimension (mm)		29 x 29 x 29 (without mount)	
Temperature		0℃ ~ 40℃ (Operating) / -20℃ ~ 60℃ (Storage)-(with < 20 ~ 80% RH)	
Vibration / Shock		98m/s^2 (10G) / 196m/s^2 (20.0G)	
Standard compliancy		CE (EN61326-1;2013년; Class A)	
Conformity		RoHS, WEEE, UL	
Warranty		3 years	