CREVIS

GigE Vision Cameras

GiGE VISION | CMOS | C MOUNT | GPIO PHOTO COUPLER | TRIGGER | 29x29 mm | CE | KC

Pregius STARVIS



Key Features

Mini-size / CMOS GigE camera
Camera standard
- GenICam, GigE Vision
Trigger input range : +4.5V~24V(Photo coupler)
Supporting PoE
eBus Driver

Pin map

Pin No.	Name	IN/OUT	Description
1	PWR	IN	10.8V ~ 13.2V Input Range
2	Trigger	IN	Opto-Isolated input, Trigger input
3	GND	IN	Strobe GND
4	Strobe	OUT	Opto-Isolated output, Strobe output
5	GND	IN	Trigger GND
6	GND	IN	Power GND

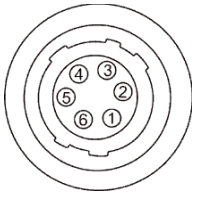

back Pannel

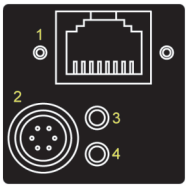

No.	Name	Remark
1	EtherNet Connector	Rj45
2	Power & I/O Connector	6Pin Circular
3,4	LED Indicator	LED

Dimension (Unit : mm)

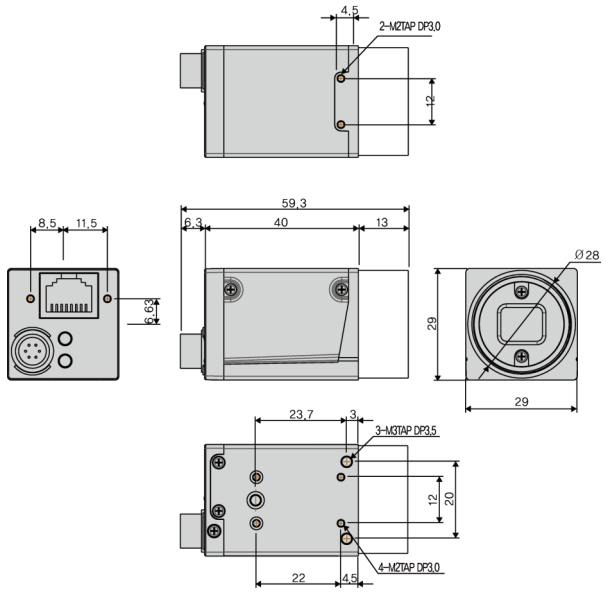

LED Indicator

LED1	Description	LED2	Description
OFF	Power off	OFF	Booting or Ready
RED	10/100 Link	RED	IP Assigning
Green	Gigabit Link	Green	Blink(Trigger exist) Grab enabled

Download (File name)

ex) SDK download:
CREVIS Site ▶ Search window ▶ File name

SDK : CVS Cam.zip

Subject to change without notice

Model		MG-A040M-280	MG-A040K-280
Sensor		Sony CMOS Pregius IMX287	
Sensor size		1/2.9"	
Pixel size (㎛)		6.9 x 6.9	
Resolution		728 x 544	
Frame Rate (Max.)		280fps	
Color / Mono		Mono Chrome	Color
Scanning method		Full / ROI / Reverse (X, Y, All)	
Synchronization		Internal (Freerun), External, Software trigger via PC	
Trigger modes		Fixed shutter, Pulse width shutter	
Shutter		Global	
Shutter speed		1us ~ 3sec (Exposure Offset : 별도)	
Gain		Analog : 0dB ~ 32dB (1x ~ 39.8x) Digital : 0dB ~ 24dB (1x ~ 16x)	
Black level		Analog : 0 ~ 4095 (12bit) Digital : 0 ~ 4095 (12bit)	
Gamma / LUT		Gamma Correction, Adjustable LUT (12bit to 12bit)	
Auto white balance		Off / Once / Continuous (Only Color Models)	
Auto gain / exposure		Off / Once / Continuous	
Interface		Ethernet 1000 Base-T (GigE Vision Standard)	
Pixel Data Format		Mono8/10/12, Mono10/12 Packed	Mono8/10/12, Mono10/12 Packed, Bayer8/10/12, Bayer10/12 Packed, YUV422 Packed
SNR		37dB	
Function control		GainAuto, ExposureAuto, BalanceWhiteAuto (Only Color Models), Acquisition Frame Rate (Adjustable), Line Debouncer, Color transformation Control, Noise Reduction Filter	
Lens mount		C mount	
Power requirements		12VDC ± 10%, PoE (Power over Ethernet 802.3af compliant)	
Consumption	DC	< 3.1W	
	PoE	< 3.6W	
Weight		< 60g	
Dimension (mm)		29 x 29 x 40 (without mount)	
Temperature		0℃ ~ 40℃ (Operating) / -10℃ ~ 50℃ (Storage)-(with < 20 ~ 80% RH)	
Vibration / Shock		98m/s^2 (10G) / 196m/s^2 (20.0G)	
Standard compliancy		CE (EN61326-1;2006년; Class A)	
Conformity		RoHS, WEEE, UL, FCC	
Warranty		3 years	

Model		MG-A160M-72	MG-A160K-72
Sensor		Sony CMOS Pregius IMX273	
Sensor size		1/2.9"	
Pixel size (㎛)		3.45 x 3.45	
Resolution		1456 x 1088	
Frame Rate (Max.)		72fps	
Color / Mono		Mono Chrome	Color
Scanning method		Full / ROI / Reverse (X,Y,All) / Decimation (Horizontal+Vertical) / Binning (Horizontal + Vertical) (Mono Model Only)	
Synchronization		Internal (Freerun), External, Software trigger via PC	
Trigger modes		Fixed shutter, Pulse width shutter	
Shutter		Global	
Shutter speed		1us ~ 3sec (Exposure Offset : 별도)	
Gain		Analog : 0dB ~ 32dB (1x ~ 39.8x) Digital : 0dB ~ 24dB (1x ~ 16x)	
Black level		Analog : 0 ~ 4095 (12bit) Digital : 0 ~ 4095 (12bit)	
Gamma / LUT		Gamma Correction, Adjustable LUT (12bit to 12bit)	
Auto white balance		Off / Once / Continuous (Only Color Models)	
Auto gain / exposure		Off / Once / Continuous	
Interface		Ethernet 1000 Base-T (GigE Vision Standard)	
Pixel Data Format		Mono8/10/12, Mono10/12 Packed	Mono8/10/12, Mono10/12 Packed, Bayer8/10/12, Bayer10/12 Packed, YUV422 Packed
SNR		36dB	
Function control		GainAuto, ExposureAuto, BalanceWhiteAuto (Only Color Models), Acquisition Frame Rate (Adjustable), Line Debouncer, Color transformation Control, Noise Reduction Filter	
Lens mount		C mount	
Power requirements		12VDC ± 10%, PoE (Power over Ethernet 802.3af compliant)	
Consumption	DC	< 3.1W	
	PoE	< 3.6W	
Weight		< 60g	
Dimension (mm)		29 x 29 x 40 (without mount)	
Temperature		0℃ ~ 40℃ (Operating) / -10℃ ~ 50℃ (Storage)-(with < 20 ~ 80% RH)	
Vibration / Shock		98m/s^2 (10G) / 196m/s^2 (20.0G)	
Standard compliancy		CE (EN61326-1;2006년; Class A)	
Conformity		RoHS, WEEE, UL, FCC	
Warranty		3 years	

Subject to change without notice

Model		MG-A320M-35	MG-A320K-35
Sensor		Sony CMOS Pregius IMX265	
Sensor size		1/1.8"	
Pixel size (㎛)		3.45 x 3.45	
Resolution		2064 x 1544	
Frame Rate (Max.)		35fps	
Color / Mono		Mono Chrome	Color
Scanning method		Full / ROI / Reverse (X,Y,All) / Decimation (Horizontal + Vertical)	
Synchronization		Internal (Freerun), External, Software trigger via PC	
Trigger modes		Fixed shutter, Pulse width shutter	
Shutter		Global	
Shutter speed		1us ~ 3sec (Exposure Offset : 별도)	
Gain		Analog : 0dB ~ 32dB (1x ~ 39.8x) Digital : 0dB ~ 24dB (1x ~ 16x)	
Black level		Analog : 0 ~ 4095 (12bit) Digital : 0 ~ 4095 (12bit)	
Gamma / LUT		Gamma Correction, Adjustable LUT (12bit to 12bit)	
Auto white balance		Off / Once / Continuous (Only Color Models)	
Auto gain / exposure		Off / Once / Continuous	
Interface		Ethernet 1000 Base-T (GigE Vision Standard)	
Pixel Data Format		Mono8/10/12, Mono10/12 Packed	Mono8/10/12, Mono10/12 Packed, Bayer8/10/12, Bayer10/12 Packed, YUV422 Packed
SNR		38dB	
Function control		GainAuto, ExposureAuto, BalanceWhiteAuto (Only Color Models), Acquisition Frame Rate (Adjustable), Line Debouncer, Color transformation Control, Noise Reduction Filter	
Lens mount		C mount	
Power requirements		12VDC ± 10%, PoE (Power over Ethernet 802.3af compliant)	
Consumption	DC	< 3W	
	PoE	< 3.5W	
Weight		< 60g	
Dimension (mm)		29 x 29 x 40 (without mount)	
Temperature		0℃ ~ 40℃ (Operating) / -10℃ ~ 50℃ (Storage)-(with < 20 ~ 80% RH)	
Vibration / Shock		98m/s^2 (10G) / 196m/s^2 (20.0G)	
Standard compliancy		CE (EN61326-1;2006년; Class A)	
Conformity		RoHS, WEEE, UL, FCC	
Warranty		3 years	

Model		MG-A500M-22	MG-A500K-22
Sensor		Sony CMOS Pregius IMX 264	
Sensor size		2/3"	
Pixel size (㎛)		3.45 x 3.45	
Resolution		2464 x 2056	
Frame Rate (Max.)		22fps	
Color / Mono		Mono Chrome	Color
Scanning method		Full / ROI / Reverse (X,Y,All) / Decimation (Horizontal + Vertical)	
Synchronization		Internal (Freerun), External, Software trigger via PC	
Trigger modes		Fixed shutter, Pulse width shutter	
Shutter		Global	
Shutter speed		1us ~ 3sec (Exposure Offset : 별도)	
Gain		Analog : 0dB ~ 32dB (1x ~ 39.8x) Digital : 0dB ~ 24dB (1x ~ 16x)	
Black level		Analog : 0 ~ 4095 (12bit) Digital : 0 ~ 4095 (12bit)	
Gamma / LUT		Gamma Correction, Adjustable LUT (12bit to 12bit)	
Auto white balance		Off / Once / Continuous (Only Color Models)	
Auto gain / exposure		Off / Once / Continuous	
Interface		Ethernet 1000 Base-T (GigE Vision Standard)	
Pixel Data Format		Mono8/10/12, Mono10/12 Packed	Mono8/10/12, Mono10/12 Packed, Bayer8/10/12, Bayer10/12 Packed, YUV422 Packed
SNR		36dB	
Function control		GainAuto, ExposureAuto, BalanceWhiteAuto (Only Color Models), Acquisition Frame Rate (Adjustable), Line Debouncer, Color transformation Control, Noise Reduction Filter	
Lens mount		C mount	
Power requirements		12VDC ± 10%, PoE (Power over Ethernet 802.3af compliant)	
Consumption	DC	< 3W	
	PoE	< 3.5W	
Weight		< 60g	
Dimension (mm)		29 x 29 x 40 (without mount)	
Temperature		0℃ ~ 40℃ (Operating) / -10℃ ~ 50℃ (Storage)-(with < 20 ~ 80% RH)	
Vibration / Shock		98m/s^2 (10G) / 196m/s^2 (20.0G)	
Standard compliancy		CE (EN61326-1;2006년; Class A)	
Conformity		RoHS, WEEE, UL, FCC	
Warranty		3 years	

Subject to change without notice

Model		MG-A121M-9	MG-A121K-9
Sensor		Sony CMOS Pregius IMX 304	
Sensor size		1.1"	
Pixel size (㎛)		3.45 x 3.45	
Resolution		4112 x 3008	
Frame Rate (Max.)		9fps	
Color / Mono		Mono Chrome	Color
Scanning method		Full / ROI / Reverse (X,Y,All) / Decimation (Horizontal + Vertical)	
Synchronization		Internal (Freerun), External, Software trigger via PC	
Trigger modes		Fixed shutter, Pulse width shutter	
Shutter		Global	
Shutter speed		1us ~ 3sec (Exposure Offset : 별도)	
Gain		Analog : 0dB ~ 32dB (1x ~ 39.8x) Digital : 0dB ~ 24dB (1x ~ 16x)	
Black level		Analog : 0 ~ 4095 (12bit) Digital : 0 ~ 4095 (12bit)	
Gamma / LUT		Gamma Correction, Adjustable LUT (12bit to 12bit)	
Auto white balance		Off / Once / Continuous (Only Color Models)	
Auto gain / exposure		Off / Once / Continuous	
Interface		Ethernet 1000 Base-T (GigE Vision Standard)	
Pixel Data Format		Mono8/10/12, Mono10/12 Packed	Mono8/10/12, Mono10/12 Packed, Bayer8/10/12, Bayer10/12 Packed, YUV422 Packed
SNR		42dB	36dB
Function control		GainAuto, ExposureAuto, BalanceWhiteAuto (Only Color Models), Acquisition Frame Rate (Adjustable), Line Debouncer, Color transformation Control, Noise Reduction Filter	
Lens mount		C mount	
Power requirements		12VDC ± 10%, PoE (Power over Ethernet 802.3af compliant)	
Consumption	DC	< 3.2W	
	PoE	< 3.7W	
Weight		< 60g	
Dimension (mm)		29 x 29 x 40 (without mount)	
Temperature		0℃ ~ 40℃ (Operating) / -10℃ ~ 50℃ (Storage)-(with < 20 ~ 80% RH)	
Vibration / Shock		98m/s^2 (10G) / 196m/s^2 (20.0G)	
Standard compliancy		CE (EN61326-1;2006년; Class A)	
Conformity		RoHS, WEEE, UL, FCC	
Warranty		3 years	

Model		MG-A600R-17	MG-A600L-17
Sensor		Sony CMOS Starvis IMX178	
Sensor size		1/1.8”	
Pixel size (㎛)		2.4 x 2.4	
Resolution		3088 x 2072	
Frame Rate (Max.)		17fps	
Color / Mono		Mono Chrome	Color
Scanning method		Full / ROI (Horizontal + Vertical) / Reverse (X,Y,All) / Binning	
Synchronization		Internal (Freerun), External, Software trigger via PC	
Trigger modes		Fixed shutter, Pulse width shutter	
Shutter		Rolling	
Shutter speed		243.5us ~ 3sec	
Gain		Analog : 0dB ~ 27dB (1x ~ 22.5x) Digital : 0dB ~ 24dB (1x ~ 16x)	
Black level		Analog : 0 ~ 255 (8bit) Digital : 0 ~ 4095 (12bit)	
Gamma / LUT		Gamma Correction (0 ~ 3.999)	
Auto white balance		Off / Once / Continuous	
Auto gain / exposure		Off / Once / Continuous	
Interface		Ethernet 1000 Base-T (GigE Vision Standard)	
Pixel Data Format		Mono8/10/12, Mono10/12 Packed	Mono8/10/12, Mono10/12Packed, Bayer8/10/12, Bayer10/12Packed, YUV422Packed
SNR		40dB	
Function control		GainAuto, ExposureAuto, BalanceWhiteAuto, Acquisition Frame Rate (Adjustable), Gamma Control, Line Debouncer, Color Transformation Control, Noise Reduction Filter, Pattern Noise Removal	
Lens mount		C mount	
Power requirements		12VDC ± 10%, PoE (Power over Ethernet 802.3af compliant)	
Consumption	DC	< 3W	
	PoE	< 3.5W	
Weight		< 60g	
Dimension (mm)		29 x 29 x 40 (without mount)	
Temperature		0℃ ~ 40℃ (Operating) / -10℃ ~ 50℃ (Storage)-(with < 20 ~ 80% RH)	
Vibration / Shock		98m/s^2 (10G) / 196m/s^2 (20.0G)	
Standard compliancy		CE (EN61326-1;2006년; Class A)	
Conformity		RoHS, WEEE, UL, FCC	
Warranty		3 years	

Subject to change without notice

Model		MG-A121R-9	MG-A121L-9
Sensor		Sony CMOS Starvis IMX226	
Sensor size		1/1.7"	
Pixel size (㎛)		1.85 x 1.85	
Resolution		4024 x 3036	
Frame Rate (Max.)		9fps	
Color / Mono		Mono Chrome	Color
Scanning method		Full / ROI / Reverse (X, Y, All)	
Synchronization		Internal (Freerun), External, Software trigger via PC	
Trigger modes		Fixed shutter, Pulse width shutter	
Shutter		Rolling, Global Reset	
Shutter speed		313.5μs ~ 3sec	
Gain		Analog : 0dB ~ 27dB (1x ~ 22.5x) Digital : 0dB ~ 24dB (1x ~ 16x)	
Black level		Analog : 0 ~ 255 (8bit) Digital : 0 ~ 4095 (12bit)	
Gamma / LUT		Gamma Correction, Adjustable LUT (12bit to 12bit)	
Auto white balance		Off / Once / Continuous (Only Color Models)	
Auto gain / exposure		Off / Once / Continuous	
Interface		Ethernet 1000 Base-T (GigE Vision Standard)	
Pixel Data Format		Mono8/10/12, Mono10/12 Packed	Mono8/10/12, Mono10/12 Packed, Bayer8/10/12, Bayer10/12 Packed, YUV422 Packed
SNR		40dB	
Function control		GainAuto, ExposureAuto, Acquisition Frame Rate (Adjustable), Color Transformation Control, Balance White Auto (Only Color Models)	
Lens mount		C mount	
Power requirements		12VDC ± 10%, PoE (Power over Ethernet 802.3af compliant)	
Consumption	DC	< 3W	
	PoE	< 3.5W	
Weight		< 60g	
Dimension (mm)		29 x 29 x 40 (without mount)	
Temperature		0℃ ~ 40℃ (Operating) / -10℃ ~ 50℃ (Storage)-(with < 20 ~ 80% RH)	
Vibration / Shock		98m/s^2 (10G) / 196m/s^2 (20.0G)	
Standard compliancy		CE (EN61326-1;2006년; Class A)	
Conformity		RoHS, WEEE, UL, FCC	
Warranty		3 years	

Model		MG-A201R-5	MG-A201L-5
Sensor		Sony CMOS Starvis IMX 183	
Sensor size		1"	
Pixel size (㎛)		2.4 x 2.4	
Resolution		5496 x 3672	
Frame Rate (Max.)		5fps	
Color / Mono		Mono Chrome	Color
Scanning method		Full / ROI / Reverse (X, Y, All)	
Synchronization		Internal (Freerun), External, Software trigger via PC	
Trigger modes		Fixed shutter, Pulse width shutter	
Shutter		Rolling, Global Reset	
Shutter speed		430 ㎲ ~ 3 sec	
Gain		Analog : 0dB ~ 27dB (1x ~ 22.5x) Digital : 0dB ~ 24dB (1x ~ 16x)	
Black level		Analog : 0 ~ 255 (8bit) Digital : 0 ~ 4095 (12bit)	
Gamma / LUT		Gamma Correction, Adjustable LUT (10bit to 10bit)	
Auto white balance		Off / Once / Continuous (Only Color Models)	
Auto gain / exposure		Off / Once / Continuous	
Interface		Ethernet 1000 Base-T (GigE Vision Standard)	
Pixel Data Format		Mono8/10, Mono10 Packed	Mono8/10, Mono10 Packed, Bayer8/10 Bayer10 Packed, YUV422 Packed
SNR		39dB	
Function control		GainAuto, ExposureAuto, BalanceWhiteAuto Acquisition Frame Rate (Adjustable), Line Debouncer Color Transformation Control, Noise Reduction Filter	
Lens mount		C mount	
Power requirements		12VDC ± 10%, PoE (Power over Ethernet 802.3af compliant)	
Consumption	DC	< 3.2W	
	PoE	< 3.7W	
Weight		< 60g	
Dimension (mm)		29 x 29 x 40 (without mount)	
Temperature		0℃ ~ 40℃ (Operating) / -10℃ ~ 50℃ (Storage)-(with < 20 ~ 80% RH)	
Vibration / Shock		98m/s² (10G) / 196m/s² (20.0G)	
Standard compliancy		CE (EN61326-1;2006년; Class A)	
Conformity		RoHS, WEEE, UL, FCC	
Warranty		3 years	

Subject to change without notice

Model		MG-A500M-FL	MG-A500K-FL
Sensor		Sony CMOS Pregius S IMX547	
Sensor size		1/1.8"	
Pixel size (㎛)		2.74 x 2.74	
Resolution		2472 x 2064	
Frame Rate (Max.)		22fps	
Color / Mono		Mono Chrome	Color
Scanning method		Full / ROI / Reverse (X,Y,All) / Decimation (Horizontal + Vertical) / Binning (Horizontal + Vertical) (Mono Model Only)	
Synchronization		Internal (Freerun), External, Software trigger via PC	
Trigger modes		Fixed shutter, Pulse width shutter	
Shutter		Global	
Shutter Speed		1us ~ 3sec (Exposure Offset : 별도)	
Gain		Analog : 0dB ~ 24 dB (1x ~ 15.8x) Digital : 0dB ~ 24 dB (1x ~ 16x)	
Black level		Analog : 0 ~ 4095 (12bit) / Digital : 0 ~ 4095 (12bit)	
Gamma / LUT		Gamma Correction (0 ~ 3.999), Adjustable LUT (12bit to 12bit)	
Auto white balance		Off / Once / Continuous (Color Model Only)	
Auto gain / exposure		Off / Once / Continuous	
Interface		Ethernet 1000 Base-T (GigE Vision Standard)	
Pixel Data Format		Mono8/10/12, Mono10/12Packed	Mono8/10/12, Mono10/12Packed, BayerRG8/10/12, BayerRG10/12Packed,YUV422Packed
SNR		38dB	39dB
Function control		GainAuto, ExposureAuto, BalanceWhiteAuto(Only Color Models) Acquisition Frame Rate(Adjustable), Line Debouncer Color Transformation Control, Noise Reduction Filter	
Lens mount		C mount	
Power requirements		12VDC ± 10%, PoE (Power over Ethernet 802.3af compliant)	
Consumption	DC	< 3.1W	
	PoE	< 3.6W	
Weight		< 65g	
Dimension (mm)		29 x 29 x 40 (without mount)	
Temperature		0℃ ~ 50℃ (Operating) / -10℃ ~ 50℃ (Storage)-(with < 20 ~ 80% RH)	
Vibration / Shock		98m/s^2 (10G) / 196m/s^2 (20.0G)	
Standard compliancy		CE (EN61326-1;2006년; Class A)	
Conformity		RoHS, WEEE, UL, FCC	
Warranty		3 years	

Model		MG-A121M-FL	MG-A121K-FL
Sensor		Sony CMOS Pregius S IMX545	
Sensor size		1/1.1"	
Pixel size (㎛)		2.74 x 2.74	
Resolution		4128 x 3008	
Frame Rate (Max.)		9fps	
Color / Mono		Mono Chrome	Color
Scanning method		Full / ROI / Reverse (X,Y,All) / Decimation (Horizontal + Vertical) / Binning (Horizontal + Vertical) (Mono Model Only)	
Synchronization		Internal (Freerun), External, Software trigger via PC	
Trigger modes		Fixed shutter, Pulse width shutter	
Shutter		Global	
Shutter speed		1us ~ 3sec (Exposure Offset : 별도)	
Gain		Analog : 0dB ~ 24 dB (1x ~ 15.8x) Digital : 0dB ~ 24 dB (1x ~ 16x)	
Black level		Analog : 0 ~ 4095 (12bit) / Digital : 0 ~ 4095 (12bit)	
Gamma / LUT		Gamma Correction (0 ~ 3.999), Adjustable LUT (12bit to 12bit)	
Auto white balance		Off / Once / Continuous (Color Model Only)	
Auto gain / exposure		Off / Once / Continuous	
Interface		Ethernet 1000 Base-T (GigE Vision Standard)	
Pixel Data Format		Mono8/10/12, Mono10/12Packed	Mono8/10/12, Mono10/12Packed, BayerRG8/10/12, BayerRG10/12Packed,YUV422Packed
SNR		39dB	40dB
Function control		GainAuto, ExposureAuto, BalanceWhiteAuto(Only Color Models) Acquisition Frame Rate(Adjustable), Line Debouncer Color Transformation Control, Noise Reduction Filter	
Lens mount		C mount	
Power requirements		12VDC ± 10% or PoE	
Consumption	DC	< 3.3W	
	PoE	< 3.8W	
Weight		< 65g	
Dimension (mm)		29 x 29 x 40 (without mount)	
Temperature		0℃ ~ 50℃ (Operating) / -10℃ ~ 50℃ (Storage)-(with < 20 ~ 80% RH)	
Vibration / Shock		98m/s^2 (10G) / 196m/s^2 (20.0G)	
Standard compliancy		CE (EN61326-1;2006년; Class A)	
Conformity		RoHS, WEEE, UL, FCC	
Warranty		3 years	

Subject to change without notice

Model		MG-A161M-FL	MG-A161K-FL
Sensor		Sony CMOS Pregius S IMX542	
Sensor size		1.1"	
Pixel size (㎛)		2.74 x 2.74	
Resolution		5328 x 3040	
Frame Rate (Max.)		7fps	
Color / Mono		Mono Chrome	Color
Scanning method		Full / ROI / Reverse (X,Y,All) / Decimation (Horizontal + Vertical) / Binning (Horizontal + Vertical) (Mono Model Only)	
Synchronization		Internal (Freerun), External, Software trigger via PC	
Trigger modes		Fixed shutter, Pulse width shutter	
Shutter		Global	
Shutter Speed		1us ~ 3sec (Exposure Offset : 별도)	
Gain		Analog : 0dB ~ 24 dB (1x ~ 15.8x) Digital : 0dB ~ 24 dB (1x ~ 16x)	
Black level		Analog : 0 ~ 4095 (12bit) / Digital : 0 ~ 4095 (12bit)	
Gamma / LUT		Gamma Correction (0 ~ 3.999), Adjustable LUT (12bit to 12bit)	
Auto white balance		Off / Once / Continuous (Color Model Only)	
Auto gain / exposure		Off / Once / Continuous	
Interface		Ethernet 1000 Base-T (GigE Vision Standard)	
Pixel Data Format		Mono8/10/12, Mono10/12Packed	Mono8/10/12, Mono10/12Packed, BayerRG8/10/12, BayerRG10/12Packed,YUV422Packed
SNR		38dB	38dB
Function control		GainAuto, ExposureAuto, BalanceWhiteAuto(Only Color Models) Acquisition Frame Rate(Adjustable), Line Debouncer Color Transformation Control, Noise Reduction Filter	
Lens mount		C mount	
Power requirements		12VDC ± 10%, PoE	
Consumption	DC	< 3.6W	
	PoE	< 4.2W	
Weight		< 65g	
Dimension (mm)		29 x 29 x 40 (without mount)	
Temperature		0℃ ~ 50℃ (Operating) / -10℃ ~ 50℃ (Storage)-(with < 20 ~ 80% RH)	
Vibration / Shock		98m/s^2 (10G) / 196m/s^2 (20.0G)	
Standard compliancy		CE (EN61326-1;2006년; Class A)	
Conformity		RoHS, WEEE, UL, FCC	
Warranty		3 years	

Model		MG-A241M-FL	MG-A241K-FL
Sensor		Sony CMOS Pregius S IMX540	
Sensor size		1.2"	
Pixel size (㎛)		2.74 x 2.74	
Resolution		5328 x 4608	
Frame Rate (Max.)		4fps	
Color / Mono		Mono Chrome	Color
Scanning method		Full / ROI / Reverse (X,Y,All) / Decimation (Horizontal + Vertical) / Binning (Horizontal + Vertical) (Mono Model Only)	
Synchronization		Internal (Freerun), External, Software trigger via PC	
Trigger modes		Fixed shutter, Pulse width shutter	
Shutter		Global	
Shutter speed		1us ~ 3sec (Exposure Offset : 별도)	
Gain		Analog : 0dB ~ 24 dB (1x ~ 15.8x) Digital : 0dB ~ 24 dB (1x ~ 16x)	
Black level		Analog : 0 ~ 4095 (12bit) / Digital : 0 ~ 4095 (12bit)	
Gamma / LUT		Gamma Correction (0 ~ 3.999), Adjustable LUT (12bit to 12bit)	
Auto white balance		Off / Once / Continuous (Color Model Only)	
Auto gain / exposure		Off / Once / Continuous	
Interface		Ethernet 1000 Base-T (GigE Vision Standard)	
Pixel Data Format		Mono8/10/12, Mono10/12Packed	Mono8/10/12, Mono10/12Packed, BayerRG8/10/12, BayerRG10/12Packed,YUV422Packed
SNR		38dB	39dB
Function control		GainAuto, ExposureAuto, BalanceWhiteAuto(Only Color Models) Acquisition Frame Rate(Adjustable), Line Debouncer Color Transformation Control, Noise Reduction Filter	
Lens mount		C mount	
Power requirements		12VDC ± 10% or PoE	
Consumption	DC	< 3.8W	
	PoE	< 4.3W	
Weight		< 65g	
Dimension (mm)		29 x 29 x 40 (without mount)	
Temperature		0℃ ~ 50℃ (Operating) / -10℃ ~ 50℃ (Storage)-(with < 20 ~ 80% RH)	
Vibration / Shock		98m/s^2 (10G) / 196m/s^2 (20.0G)	
Standard compliancy		CE (EN61326-1;2006년; Class A)	
Conformity		RoHS, WEEE, UL, FCC	
Warranty		3 years	

Subject to change without notice