CoaXPress Cameras



Pregius **STARVIS**



Key Features

Mini-size CMOS CoaXpress camera
Camera standard
- GenICam, CoaXpress
Trigger input range : +4.5V~24V(Photo coupler)
Supporting PoCXP

Dimension (Unit : mm)

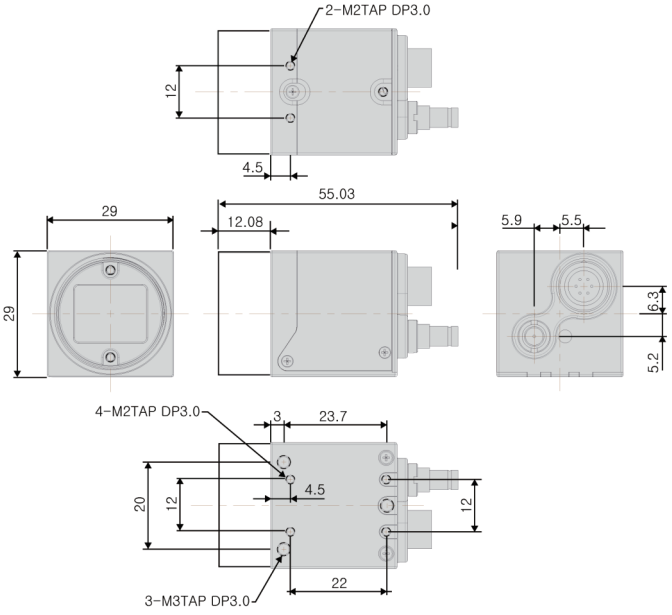

Pin map

Pin No.	Name	IN/OUT	Description
1	PWR	IN	10.8V~26.4V Input Range
2	Trigger	IN	Opto-Isolated Input, Trigger input
3	GND	OUT	Strobe GND
4	Strobe	OUT	Opto-Isolated output, Strobe output
5	GND	IN	Trigger GND
6	GND	IN	Power GND

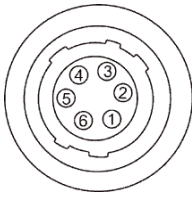

LED Indicator

State	Indication
No power	Off
System booting	Solid orange
Powered, but nothing connected	Slow pulse red
no data being transffered	Solid green
Waiting for event	Slow pulse orange
Data being transferred	Fast flash green

back Pannel



No.	Name	Remark
1	CoaXpress Connector	DIN
2	Power & I/O Connector	6Pin Circular
3	LED Indicator	LED

Model		MX-A040M-523	MX-A040K-523
Sensor		Sony CMOS Pregius IMX287	
Sensor size		1/2.9"	
Pixel size (㎛)		6.9 x 6.9	
Resolution		720 x 540	
Frame Rate (Max.)		523fps	
Color / Mono		Mono Chrome	Color
Scanning method		Full / ROI (Horizontal + Vertical) / Reverse (X,Y,All)	
Synchronization		Internal (Freerun), External (CXP or Circular), Software trigger via PC	
Trigger modes		Fixed shutter, Pulse width shutter	
Shutter		Global	
Shutter speed		1us ~ 3sec (Exposure Offset 별도)	
Gain		Analog : 0dB ~ 24dB (1x ~ 15.8x) Digital : 0dB ~ 18dB (1x ~ 8x)	
Black level		Analog : 0 ~ 1023 (10bit) / Digital : 0 ~ 1023 (10bit)	
Gamma / LUT		Gamma Correction, Adjustable LUT (10bit to 10bit)	
Auto white balance		Off / Once / Continuous (Only Color Models)	
Auto gain / exposure		Off / Once / Continuous	
Interface		CoaXpress	
Pixel Data Format		Mono8/10	Mono8/10, Bayer8/10
SNR		33dB	36dB
Function control		GainAuto, ExposureAuto, BalanceWhiteAuto, Acquisition Frame Rate (Adjustable), Shading Correction(FFC), Noise Reduction Filter	
Lens mount		C mount	
Power requirements		DC 12V ~ 24V ± 10% or PoCXP	
Consumption	DC	< 2.5W	
	PoCXP		
Weight		< 49g	
Dimension (mm)		29 x 29 x 29 (without mount)	
Temperature		0℃ ~ 40℃ (Operating) / -5℃ ~ 45℃ (Storage)-(with < 20 ~ 80% RH)	
Vibration / Shock		98m/s^2 (10G) / 196m/s^2 (20.0G)	
Standard compliancy		CE (EN61326-1;2006년; Class A)	
Conformity		RoHS, WEEE, UL, FCC	
Warranty		3 years	

Subject to change without notice

Model		MX-A160M-276	MX-A160K-276
Sensor		Sony CMOS Pregius IMX273	
Sensor size		1/2.9"	
Pixel size (㎛)		3.45 x 3.45	
Resolution		1440 x 1080	
Frame Rate (Max.)		276fps	
Color / Mono		Mono Chrome	Color
Scanning method		Full / ROI / Decimation (Horizontal + Vertical) / Reverse (X, Y, All) / Binning (Only mono models)	
Synchronization		Internal (Freerun), External (CXP or Circular), Software trigger via PC	
Trigger modes		Fixed shutter, Pulse width shutter	
Shutter		Global	
Shutter speed		1us ~ 3sec (Exposure Offset 별도)	
Gain		Analog : 0dB ~ 24dB (1x ~ 15.8x) Digital : 0dB ~ 18dB (1x ~ 8x)	
Black level		Analog : 0 ~ 1023 (10bit) / Digital : 0 ~ 1023 (10bit)	
Gamma / LUT		Gamma Correction, Adjustable LUT (10bit to 10bit)	
Auto white balance		Off / Once / Continuous (Only Color Models)	
Auto gain / exposure		Off / Once / Continuous	
Interface		CoaXpress	
Pixel Data Format		Mono8/10	Mono8/10, Bayer8/10
SNR		34dB	35dB
Function control		GainAuto, ExposureAuto, BalanceWhiteAuto, Acquisition Frame Rate (Adjustable), Shading Correction (FFC), Noise Reduction Filter	
Lens mount		C mount	
Power requirements		DC 12V ~ 24V ± 10% or PoCXP	
Consumption	DC	< 2.6W	
	PoCXP		
Weight		< 49g	
Dimension (mm)		29 x 29 x 29 (without mount)	
Temperature		0℃ ~ 40℃ (Operating) / -5℃ ~ 45℃ (Storage)-(with < 20 ~ 80% RH)	
Vibration / Shock		98m/s^2 (10G) / 196m/s^2 (20.0G)	
Standard compliancy		CE (EN61326-1;2006년; Class A)	
Conformity		RoHS, WEEE, UL, FCC	
Warranty		3 years	

Model		MX-A320M-184	MX-A320K-184
Sensor		Sony CMOS Pregius IMX252	
Sensor size		1/1.8”	
Pixel size (㎛)		3.45 x 3.45	
Resolution		2064 x 1544	
Frame Rate (Max.)		184fps	
Color / Mono		Mono Chrome	Color
Scanning method		Full / ROI / Decimation (Horizontal + Vertical) / Reverse (X, Y, All) / Binning (Only mono models) / Binning (Vertical)	
Synchronization		Internal (Freerun), External (CXP or Circular), Software trigger via PC	
Trigger modes		Fixed shutter, Pulse width shutter	
Shutter		Global	
Shutter speed		1us ~ 3sec (Exposure Offset 별도)	
Gain		Analog : 0dB ~ 24dB (1x ~ 15.8x) Digital : 0dB ~ 18dB (1x ~ 8x)	
Black level		Analog : 0 ~ 1023 (10bit) / Digital : 0 ~ 1023 (10bit)	
Gamma / LUT		Gamma Correction, Adjustable LUT (10bit to 10bit)	
Auto white balance		Off / Once / Continuous (Only Color Models)	
Auto gain / exposure		Off / Once / Continuous	
Interface		CoaXpress	
Pixel Data Format		Mono8/10	Mono8/10, Bayer8/10
SNR		38dB	40dB
Function control		GainAuto, ExposureAuto, BalanceWhiteAuto, Acquisition Frame Rate (Adjustable), Shading Correction (FFC), Noise Reduction Filter	
Lens mount		C mount	
Power requirements		DC 12V ~ 24V ± 10% or PoCXP	
Consumption	DC	< 3.1W	
	PoCXP		
Weight		< 49g	
Dimension (mm)		29 x 29 x 29 (without mount)	
Temperature		0℃ ~ 40℃ (Operating) / -5℃ ~ 45℃ (Storage)-(with < 20 ~ 80% RH)	
Vibration / Shock		98m/s^2 (10G) / 196m/s^2 (20.0G)	
Standard compliancy		CE (EN61326-1;2006년; Class A)	
Conformity		RoHS, WEEE, UL, FCC	
Warranty		3 years	

Subject to change without notice

Model		MX-A500M-116	MX-A500K-116
Sensor		Sony CMOS Pregius IMX250	
Sensor size		2/3"	
Pixel size (㎛)		3.45 x 3.45	
Resolution		2464 x 2056	
Frame Rate (Max.)		116fps	
Color / Mono		Mono Chrome	Color
Scanning method		Full / ROI / Decimation (Horizontal + Vertical) / Reverse (X, Y, All) / Binning (Only mono models) / Binning (Vertical)	
Synchronization		Internal (Freerun), External (CXP or Circular), Software trigger via PC	
Trigger modes		Fixed shutter, Pulse width shutter	
Shutter		Global	
Shutter speed		1us ~ 3sec (Exposure Offset 별도)	
Gain		Analog : 0dB ~ 24dB (1x ~ 15.8x) Digital : 0dB ~ 18dB (1x ~ 8x)	
Black level		Analog : 0 ~ 1023 (10bit) / Digital : 0 ~ 1023 (10bit)	
Gamma / LUT		Gamma Correction, Adjustable LUT (10bit to 10bit)	
Auto white balance		Off / Once / Continuous (Only Color Models)	
Auto gain / exposure		Off / Once / Continuous	
Interface		CoaXpress	
Pixel Data Format		Mono8/10	Mono8/10, Bayer8/10
SNR		38dB	40dB
Function control		GainAuto, ExposureAuto, BalanceWhiteAuto, Acquisition Frame Rate (Adjustable), Shading Correction (FFC), Noise Reduction Filter	
Lens mount		C mount	
Power requirements		DC 12V ~ 24V ± 10% or PoCXP	
Consumption	DC	< 3.1W	
	PoCXP		
Weight		< 49g	
Dimension (mm)		29 x 29 x 29 (without mount)	
Temperature		0℃ ~ 40℃ (Operating) / -5℃ ~ 45℃ (Storage)-(with < 20 ~ 80% RH)	
Vibration / Shock		98m/s^2 (10G) / 196m/s^2 (20.0G)	
Standard compliancy		CE (EN61326-1;2006년; Class A)	
Conformity		RoHS, WEEE, UL, FCC	
Warranty		3 years	

Model		MX-A890M-66	MX-A890K-66
Sensor		Sony CMOS Pregius IMX255	
Sensor size		1”	
Pixel size (㎛)		3.45 x 3.45	
Resolution		4096 x 2176	
Frame Rate (Max.)		66fps	
Color / Mono		Mono Chrome	Color
Scanning method		Full / ROI / Decimation (Horizontal + Vertical) / Reverse (X, Y, All) / Binning (Only mono models)	
Synchronization		Internal (Freerun), External (CXP or Circular), Software trigger via PC	
Trigger modes		Fixed shutter, Pulse width shutter	
Shutter		Global	
Shutter speed		1us ~ 3sec (Exposure Offset 별도)	
Gain		Analog : 0dB ~ 24dB (1x ~ 15.8x) Digital : 0dB ~ 18dB (1x ~ 8x)	
Black level		Analog : 0 ~ 1023 (10bit) / Digital : 0 ~ 1023 (10bit)	
Gamma / LUT		Gamma Correction, Adjustable LUT (10bit to 10bit)	
Auto white balance		Off / Once / Continuous (Only Color Models)	
Auto gain / exposure		Off / Once / Continuous	
Interface		CoaXpress	
Pixel Data Format		Mono8/10	Mono8/10, Bayer8/10
SNR		38dB	41dB
Function control		GainAuto, ExposureAuto, BalanceWhiteAuto, Acquisition Frame Rate (Adjustable), Shading Correction (FFC), Noise Reduction Filter	
Lens mount		C mount	
Power requirements		DC 12V ~ 24V ± 10% or PoCXP	
Consumption	DC	< 3.5W	
	PoCXP		
Weight		< 49g	
Dimension (mm)		29 x 29 x 29 (without mount)	
Temperature		0℃ ~ 40℃ (Operating) / -5℃ ~ 45℃ (Storage)-(with < 20 ~ 80% RH)	
Vibration / Shock		98m/s^2 (10G) / 196m/s^2 (20.0G)	
Standard compliancy		CE (EN61326-1;2006년; Class A)	
Conformity		RoHS, WEEE, UL	
Warranty		3 years	

Subject to change without notice

Model		MX-A121M-23	MX-A121K-23
Sensor		Sony CMOS Pregius IMX304	
Sensor size		1.1”	
Pixel size (㎛)		3.45 x 3.45	
Resolution		4096 x 3000	
Frame Rate (Max.)		23fps	
Color / Mono		Mono Chrome	Color
Scanning method		Full / ROI / Decimation (Horizontal + Vertical) / Reverse (X, Y, All)	
Synchronization		Internal (Freerun), External (CXP or Circular), Software trigger via PC	
Trigger modes		Fixed shutter, Pulse width shutter	
Shutter		Global	
Shutter speed		1us ~ 3sec (Exposure Offset 별도)	
Gain		Analog : 0dB ~ 24dB (1x ~ 15.8x) Digital : 0dB ~ 18dB (1x ~ 8x)	
Black level		Analog : 0 ~ 1023 (10bit) / Digital : 0 ~ 1023 (10bit)	
Gamma / LUT		Gamma Correction, Adjustable LUT (10bit to 10bit)	
Auto white balance		Off / Once / Continuous (Only Color Models)	
Auto gain / exposure		Off / Once / Continuous	
Interface		CoaXpress	
Pixel Data Format		Mono8/10	Mono8/10, Bayer8/10
SNR		38dB	41dB
Function control		GainAuto, ExposureAuto, BalanceWhiteAuto, Acquisition Frame Rate (Adjustable), Shading Correction (FFC), Noise Reduction Filter	
Lens mount		C mount	
Power requirements		DC 12V ~ 24V ± 10% or PoCXP	
Consumption	DC	< 2.6W	
	PoCXP		
Weight		< 49g	
Dimension (mm)		29 x 29 x 29 (without mount)	
Temperature		0℃ ~ 40℃ (Operating) / -5℃ ~ 45℃ (Storage)-(with < 20 ~ 80% RH)	
Vibration / Shock		98m/s^2 (10G) / 196m/s^2 (20.0G)	
Standard compliancy		CE (EN61326-1;2006년; Class A)	
Conformity		RoHS, WEEE, UL, FCC	
Warranty		3 years	

Model		MX-A121M-48	MX-A121K-48
Sensor		Sony CMOS Pregius IMX253	
Sensor size		1.1”	
Pixel size (㎛)		3.45 x 3.45	
Resolution		4096 x 3000	
Frame Rate (Max.)		48fps	
Color / Mono		Mono Chrome	Color
Scanning method		Full / ROI / Decimation (Horizontal + Vertical) / Reverse (X, Y, All) / Binning (Only mono models)	
Synchronization		Internal (Freerun), External (CXP or Circular), Software trigger via PC	
Trigger modes		Fixed shutter, Pulse width shutter	
Shutter		Global	
Shutter speed		1us ~ 3sec (Exposure Offset 별도)	
Gain		Analog : 0dB ~ 24dB (1x ~ 15.8x) Digital : 0dB ~ 18dB (1x ~ 8x)	
Black level		Analog : 0 ~ 1023 (10bit) / Digital : 0 ~ 1023 (10bit)	
Gamma / LUT		Gamma Correction, Adjustable LUT (10bit to 10bit)	
Auto white balance		Off / Once / Continuous (Only Color Models)	
Auto gain / exposure		Off / Once / Continuous	
Interface		CoaXpress	
Pixel Data Format		Mono8/10	Mono8/10, Bayer8/10
SNR		38dB	40dB
Function control		GainAuto, ExposureAuto, BalanceWhiteAuto, Acquisition Frame Rate (Adjustable), Shading Correction (FFC), Noise Reduction Filter	
Lens mount		C mount	
Power requirements		DC 12V ~ 24V ± 10% or PoCXP	
Consumption	DC	< 3.5W	
	PoCXP		
Weight		< 49g	
Dimension (mm)		29 x 29 x 29 (without mount)	
Temperature		0℃ ~ 40℃ (Operating) / -5℃ ~ 45℃ (Storage)-(with < 20 ~ 80% RH)	
Vibration / Shock		98m/s^2 (10G) / 196m/s^2 (20.0G)	
Standard compliancy		CE (EN61326-1;2006년; Class A)	
Conformity		RoHS, WEEE, UL, FCC	
Warranty		3 years	

Subject to change without notice

Model		MX-A121R-43	MX-A121L-43
Sensor		Sony CMOS Starvis IMX226	
Sensor size		1/1.7”	
Pixel size (㎛)		1.85 x 1.85	
Resolution		4016 x 3036	
Frame Rate (Max.)		43fps	
Color / Mono		Mono Chrome	Color
Scanning method		Full / ROI / Reverse (X, Y, All)	
Synchronization		Internal (Freerun), External (CXP or Circular), Software trigger via PC	
Trigger modes		Fixed shutter, Pulse width shutter	
Shutter		Rolling / Global Reset	
Shutter speed		450.00us ~ 3sec	
Gain		Analog : 0dB ~ 27dB (1x ~ 22.5x) Digital : 0dB ~ 18dB (1x ~ 8x)	
Black level		Analog : 0 ~ 1023 (10bit) / Digital : 0 ~ 1023 (10bit)	
Gamma / LUT		Gamma Correction, Adjustable LUT (10bit to 10bit)	
Auto white balance		Off / Once / Continuous (Only Color Models)	
Auto gain / exposure		Off / Once / Continuous	
Interface		CoaXpress	
Pixel Data Format		Mono8/10	Mono8/10, Bayer8/10
SNR		39dB	44dB
Function control		GainAuto, ExposureAuto, BalanceWhiteAuto, Acquisition Frame Rate (Adjustable), Shading Correction (FFC), Noise Reduction Filter	
Lens mount		C mount	
Power requirements		DC 12V ~ 24V ± 10% or PoCXP	
Consumption	DC	< 2.6W	
	PoCXP		
Weight		< 49g	
Dimension (mm)		29 x 29 x 29 (without mount)	
Temperature		0℃ ~ 40℃ (Operating) / -5℃ ~ 45℃ (Storage)-(with < 20 ~ 80% RH)	
Vibration / Shock		98m/s^2 (10G) / 196m/s^2 (20.0G)	
Standard compliancy		CE (EN61326-1;2006년; Class A)	
Conformity		RoHS, WEEE, UL, FCC	
Warranty		3 years	

Model		MX-A201R-26	MX-A201L-26
Sensor		Sony CMOS Starvis IMX183	
Sensor size		1”	
Pixel size (㎛)		2.4 x 2.4	
Resolution		5488 x 3672	
Frame Rate (Max.)		26fps	
Color / Mono		Mono Chrome	Color
Scanning method		Full / ROI / Reverse (X, Y, All)	
Synchronization		Internal (Freerun), External (CXP or Circular), Software trigger via PC	
Trigger modes		Fixed shutter, Pulse width shutter	
Shutter		Rolling / Global Reset	
Shutter speed		806.00us ~ 3sec	
Gain		Analog : 0dB ~ 27dB (1x ~ 22.5x) Digital : 0dB ~ 18dB (1x ~ 8x)	
Black level		Analog : 0 ~ 1023 (10bit) / Digital : 0 ~ 1023 (10bit)	
Gamma / LUT		Gamma Correction, Adjustable LUT (10bit to 10bit)	
Auto white balance		Off / Once / Continuous (Only Color Models)	
Auto gain / exposure		Off / Once / Continuous	
Interface		CoaXpress	
Pixel Data Format		Mono8/10	Mono8/10, Bayer8/10
SNR		38dB	41dB
Function control		GainAuto, ExposureAuto, BalanceWhiteAuto, Acquisition Frame Rate (Adjustable), Shading Correction (FFC), Noise Reduction Filter	
Lens mount		C mount	
Power requirements		DC 12V ~ 24V ± 10% or PoCXP	
Consumption	DC	< 2.9W	
	PoCXP		
Weight		< 49g	
Dimension (mm)		29 x 29 x 29 (without mount)	
Temperature		0℃ ~ 40℃ (Operating) / -5℃ ~ 45℃ (Storage)-(with < 20 ~ 80% RH)	
Vibration / Shock		98m/s^2 (10G) / 196m/s^2 (20.0G)	
Standard compliancy		CE (EN61326-1;2006년; Class A)	
Conformity		RoHS, WEEE UL, FCC	
Warranty		3 years	

Subject to change without notice

CoaXPress 2.0 Cameras (2Ch)



Key Features

High resolution CMOS CoaXPress2.0 Camera
Supporting FFC
Supporting PoCXP
12.5Gbps x 2ch
Max Cable Length : 30meter @ CXP12

Back Pannel

Pin No.	Name	Description
1	CoaXPress Connector 1	MicroBNC Type
2	CoaXPress Connector 2	MicroBNC Type
3	LED Indicator 1	LED
4	LED Indicator 2	LED
5	I/O Connector	6 Pin Circular Connector

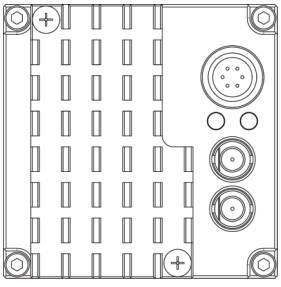

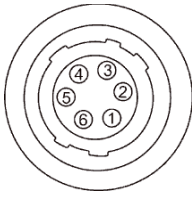

6 pin Circular Connector

Pin No.	Name	IN/OUT	Description
1	GPIO	IN/OUT	Line5, Direct I/O
2	GPI_ISO+	IN	Opto-Isolated input, Trigger input
3	GPO_ISO+	OUT	Opto-Isolated output, Strobe output
4	GPI_ISO-	IN	Trigger GND
5	GPO_ISO-	OUT	Strobe GND
6	GPIO GND	IN/OUT	

Dimension (Unit : mm)

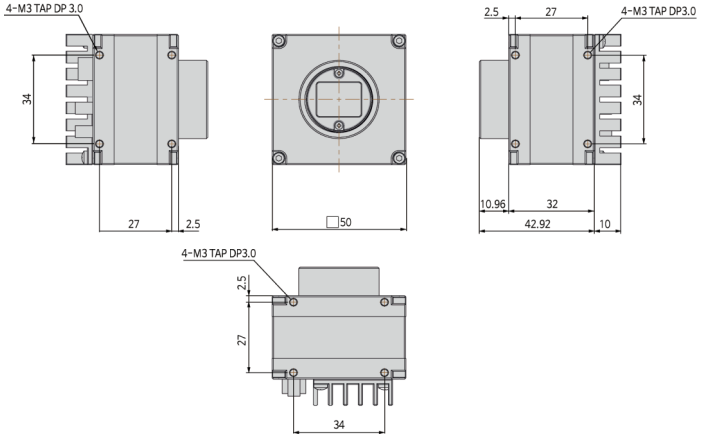

LED Indicator

State	Indication
No power	Off
System booting	Solid orange
Powered, but nothing connected	Slow pulse red
Connection detection in progress	Fast flash orange
Device - Host connected, but no data being transferred	Solid green
Device - Host connected, waiting for event (e.g. trigger)	Slow flash orange
Device - Host connected, data being transferred	Fast flash green

Model	HX-A241M-94
Sensor	CSony CMOS Pregius S IMX530
Sensor size	1.2"
Pixel size (㎛)	2.74 x 2.74
Resolution	5328 x 4608
Frame Rate (Max.)	94fps
Color / Mono	Mono Crome
Scanning method	Full / ROI / Reverse(X,Y,All) / Decimation (Horizontal + Vertical)
Synchronization	Internal (Freerun), External (CXP or 6Pn Circular), Software trigger via PC
Trigger modes	Fixed shutter, Pulse width shutter
Shutter	Global
Shutter Speed	1us ~ 3sec (Exposure Offset : 별도)
Gain	Analog : 0dB ~ 24dB (1x ~ 15.8x) Digital : 0dB ~ 18dB (1x ~ 8x)
Black level	Analog : 0 ~ 255 (ADC 8bit), 1023 (ADC 10bit), 4095 (ADC 12bit) Digital : 0 ~ 4095 (12bit)
Gamma / LUT	Gamma Correction (0 ~ 3.999), Adjustable LUT (10bit to 10bit)
Auto White Balance	Off / Once / Continuous (Color Model Only)
Auto gain / exposure	Off / Once / Continuous
Interface	CoaXPress-12@2ch / Micro BNC
Pixel Data Format	Mono8/10/12
Function control	Gain/Exposure Auto, Acquisition Frame Rate(Adjustable), Line Debouncer, Defect Pixel Correction, Shading Correction(FFC), Noise Reduction
Lens mount	C mount
Power requirements	PoCXP
Dimension (mm)	50 x 50 x 34 (Without mount, Connector)
Temperature	0℃ ~ 40℃ (Operating) / -20℃ ~ 60℃ (with < 20 ~ 80% RH) (Storage)
Vibration / Shock	98m/s^2 (10G) / 196m/s^2 (20.0G)
Standard compliancy	CE (EN61326-1;2006년; Class A)
Conformity	RoHS, WEEE, FCC
Warranty	3 years

Subject to change without notice

Model	HX-F251M-75
Sensor	Gpixel GMAX0505
Sensor size	1.1"
Pixel size (㎛)	2.5 x 2.5
Resolution	5120 x 5120
Frame Rate (Max.)	75fps
Color / Mono	Mono Crome
Scanning method	Full / ROI / Reverse(X,Y,All) / Decimation (Vertical)
Synchronization	Internal (Freerun), External (CXP or 6Pn Circular), Software trigger via PC
Trigger modes	Fixed shutter, Pulse width shutter
Shutter	Global
Shutter Speed	1us ~ 3sec (Exposure Offset : 별도)
Gain	Digital : x1 ~ x4
Black level	Digital : 0 ~ 1023 (10bit)
Gamma / LUT	Gamma Correction (0 ~ 3.999), Adjustable LUT (10bit to 10bit)
Auto White Balance	Off / Once / Continuous (Color Model Only)
Auto gain / exposure	Off / Once / Continuous
Interface	CoaXPress-12@2ch / Micro BNC
Pixel Data Format	Mono8/10
Function control	Gain/Exposure Auto, Acquisition Frame Rate(Adjustable), Line Debouncer, Defect Pixel Correction, Shading Correction(FFC), Noise Reduction
Lens mount	C mount
Power requirements	PoCXP
Dimension (mm)	50 x 50 x 34 (Without mount, Connector)
Temperature	0℃ ~ 40℃ (Operating) / -20℃ ~ 60℃ (with < 20 ~ 80% RH) (Storage)
Vibration / Shock	98m/s^2 (10G) / 196m/s^2 (20.0G)
Standard compliancy	CE (EN61326-1;2006년; Class A)
Conformity	RoHS, WEEE, FCC
Warranty	3 years

CoaXPress 2.0 Cameras (4Ch)

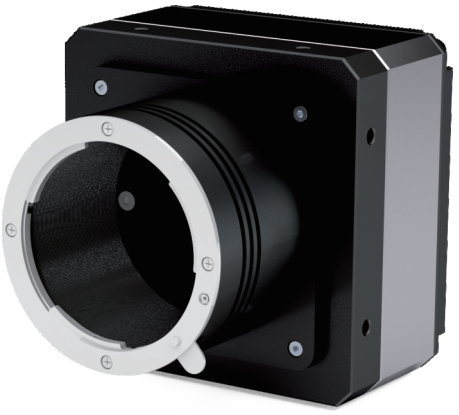

Key Features

High resolution CMOS CoaXPress2.0 Camera (25/67M)
Supporting FFC
Supporting PoCXP
12.5Gbps x 4ch
Max Cable Length : 30meter @ CXP12

Dimension (Unit : mm)

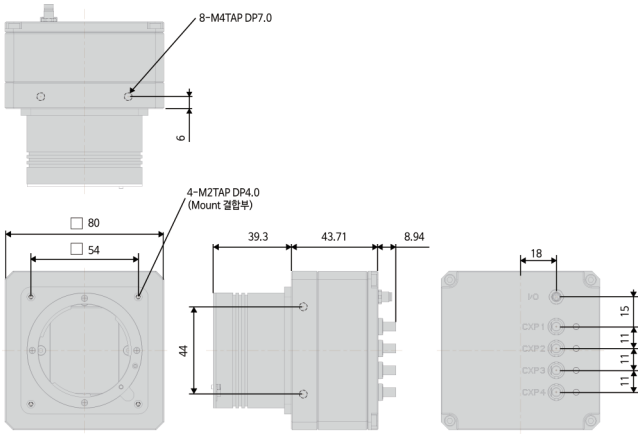

Back Pannel

Pin No.	Name	Description
1	CoaXPress Connector 1	MicroBNC Type
2	CoaXPress Connector 2	MicroBNC Type
3	CoaXPress Connector 3	MicroBNC Type
4	CoaXPress Connector 4	MicroBNC Type
5	LED Indicator 1	LED
6	LED Indicator 2	LED
7	LED Indicator 3	LED
8	LED Indicator 4	LED
9	I/O Connector	4 Pin Circular Connector

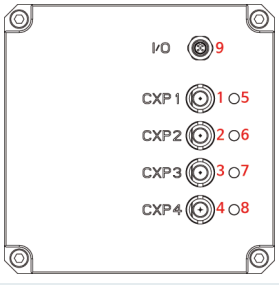

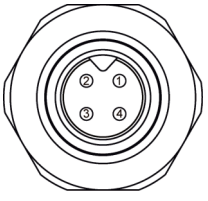

4 pin Circular Connector

Pin No.	Name	IN/OUT	Description
1	GPIO1	IN/OUT	LINE2 (Direct IO, 3.3V)
2	GND	IN	Direct IO GND
3	GPIO2	IN/OUT	LINE3 (Direct IO, 3.3V)
4	GND	IN	Direct IO GND

LED Indicator

State	Indication
No power	Off
System booting	Solid orange
Powered, but nothing connected	Slow pulse red
Connection detection in progress, PoCXP active	Fast flash alternate green / orange
Connection detection in progress, PoCXP not in use	Fast flash orange
Device / Host connected, but no data being transferred	Solid green
Device / Host connected, waiting for event	Slow pulse orange

Subject to change without notice

Model	HX-F251M-150	HX-F251K-150
Sensor	GMAX0505 25M	
Sensor size	1.1"	
Pixel size (㎛)	2.5 x 2.5	
Resolution	5120 x 5120	
Pixel Clock	96MHz	
Frame Rate (Max.)	150fps	
Color / Mono	Mono Chrome	Color
Scanning method	Full / ROI (Horizontal + Vertical) / Reverse (X), Decimation (Y)	
Synchronization	Internal (Freerun), External (CXP or Circular), Software trigger via PC	
Trigger modes	Fixed shutter, Pulse width shutter	
Shutter	Global	
Shutter speed	1us ~ 3sec (Exposure Offset 별도)	
Gain	Digital : 1x ~ 4x	
Black level	Digital : 0 ~ 1023 (10bit)	
Gamma / LUT	Adjustable LUT (10bit to 10bit)	
Auto white balance	Off / Once / Continuous	
Auto gain / exposure	Off / Once / Continuous	
Interface	CoaxPress Standard	
Pixel Data Format	Mono8	Bayer8
SNR	36dB	
Function control	GainAuto, ExposureAuto, BalanceWhiteAuto, Acquisition Frame Rate (Adjustable), Defective Pixel Correction, Shading Correction (FFC)	
Lens mount	C mount	
Video I/F	CoaXPress / Micro-BNC	
Power requirements	PoCXP (Two PoCXP cables required)	
Consumption	PoCXP	
Weight	< 450g	
Dimension (mm)	80 x 80 x 41 (without connector)	
Temperature	0℃ ~ 35℃ (Operating) / -20℃ ~ 60℃ (with < 20 ~ 80% RH) (Storage)	
Vibration / Shock	98m/s^2 (10G) / 196m/s^2 (20.0G)	
Standard compliancy	CE (EN61326-1:2013년; Class A)	
Conformity	RoHS, WEEE, UL	
Warranty	3 years	

Model	HX-E671M-65	HX-E671K-65
Sensor	EMERALD 67M	
Sensor size	APS-C	
Pixel size (㎛)	2.5 x 2.5	
Resolution	8192 x 8192	
Pixel Clock	75.4MHz	
Frame Rate (Max.)	65fps	
Color / Mono	Mono Chrome	Color
Scanning method	Full / ROI (Horizontal + Vertical) / Reverse (X,Y,All)	
Synchronization	Internal (Freerun), External (CXP or Circular), Software trigger via PC	
Trigger modes	Fixed shutter, Pulse width shutter	
Shutter	Global	
Shutter speed	1us ~ 3sec (Exposure Offset 별도)	
Gain	Analog : 1x ~ 3.99x Digital : 1x ~ 4x	
Black level	Digital : 0 ~ 1024 (10bit)	
Gamma / LUT	Adjustable LUT (10bit to 10bit)	
Auto white balance	Off / Once / Continuous	
Auto gain / exposure	Off / Once / Continuous	
Interface	CoaxPress Standard	
Pixel Data Format	Mono8/10	Bayer8/10
SNR	36dB	
Function control	GainAuto, ExposureAuto, BalanceWhiteAuto, Acquisition Frame Rate (Adjustable), Defective Pixel Correction, Shading Correction (FFC), Noise Reduction Filter	
Lens mount	F mount	
Video I/F	CoaXPress / Micro-BNC	
Power requirements	PoCXP (Two PoCXP cables required)	
Consumption	PoCXP	
Weight	< 461g	
Dimension (mm)	80 x 80 x 44.14 (without connector)	
Temperature	0℃ ~ 45℃ (Operating) / -20℃ ~ 60℃ (with < 20 ~ 80% RH) (Storage)	
Vibration / Shock	98m/s^2 (10G) / 196m/s^2 (20.0G)	
Standard compliancy	CE (EN61326-1;2013년; Class A)	
Conformity	RoHS, WEEE, UL	
Warranty	3 years	

Subject to change without notice