# Cameralink Cameras (Base)




Pregius STARVIS



## Key Features

Mini-size CMOS CameraLink camera
Standard cameralink interface
Trigger input range : +4.5V ~ +24V
Supporting PoCL

## Pin map

| Pin No. | Name | IN/OUT | Description |
|---|---|---|---|
| 1 | PWR | IN | 10.8V~26.4V Input Range |
| 2 | GPIO1 | IN/OUT | TTL Input / Output |
| 3 | GPIO2 | IN/OUT | TTL Input / Output |
| 4 | IO_GND | IN | IO_GND |
| 5 | NC | - | - |
| 6 | GND | IN | Power GND |

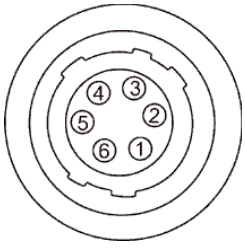


## Dimension (Unit : mm)

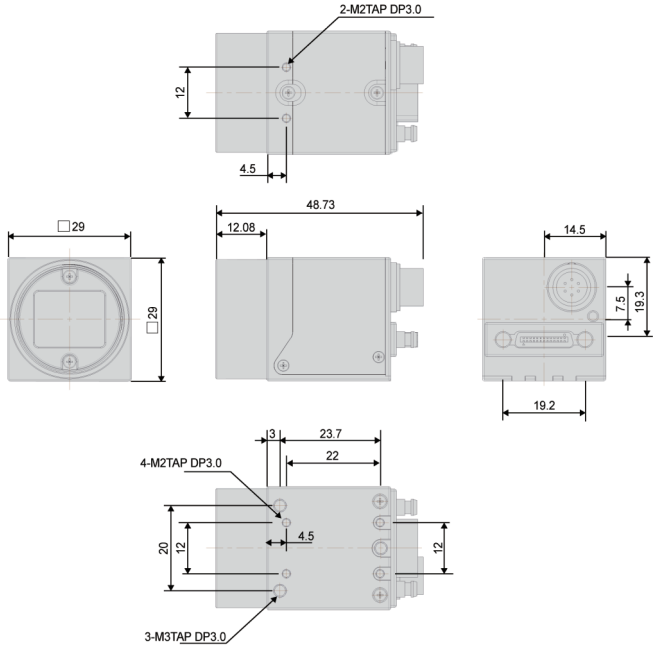


## Download (File name)

**ex)** SDK download:
CREVIS Site ▶ Search window ▶ File name

CL-Installation Guide : cameralink_manual.zip
Camfile : cameralink_camfile.zip
CamguideCL : camguideCL.zip

| Model | | MC-A040M-523 | MC-A040K-523 |
|---|---|---|---|
| Sensor | | Sony CMOS Pregius IMX 287 | |
| Sensor size | | 1/2.9" | |
| Pixel size (㎛) | | 6.9 x 6.9 | |
| Resolution | | 720 x 540 | |
| Frame Rate (Max.) | | 523fps | |
| Color / Mono | | Mono Chrome | Color |
| Scanning method | | Full / ROI / Reverse (x, y, all) | |
| Synchronization | | Internal (Freerun), External (CC1 or Circular), Software trigger via PC | |
| Trigger modes | | Timed, Trigger width | |
| Shutter | | Global | |
| Shutter speed | | 1us ~ 3sec (Exposure Offset : 별도) | |
| Gain | | Analog : 0dB ~ 24dB (1x ~ 15.8x)<br>Digital : 0dB ~ 18dB (1x ~ 8x) | |
| Black level | | Analog : 0 ~ 255 (ADC 8bit) 0 ~ 1023 (ADC 10bit) 0 ~ 4095 (ADC 12bit)<br>Digital : 0 ~ 1023 (10bit) | |
| Gamma / LUT | | Gamma Correction, Adjustable LUT (10bit to 10bit) | |
| Auto white balance | | Off / Once / Continuous (Only Color Models) | |
| Auto gain / exposure | | Off / Once / Continuous | |
| Interface | | Mini CameraLink™, PoCL | |
| Pixel data formats | | Mono8/10 | Mono8/10, Bayer8/10, RGB8 |
| SNR | | 37dB | 40 dB |
| Function control | | GainAuto, ExposureAuto, BalanceWhiteAuto, Acquisition Frame Rate (Adjustable),<br>Shading Correction (FFC), Noise Reduction Filter | |
| Lens mount | | C mount | |
| Power requirements | | DC 12V ~ 24V ± 10% or PoCL | |
| Consumption | DC | < 2.1W | |
| | PoCL | | |
| Weight | | < 44g | |
| Dimension (mm) | | 29 x 29 x 29 (without mount) | |
| Temperature | | 0℃ ~ 45℃ (Operating) / -20℃ ~ 60℃ (Storage)-(with < 20 ~ 80% RH) | |
| Vibration / Shock | | 98m/s$^2$ (10G) / 196m/s$^2$ (20.0G) | |
| Standard compliancy | | CE (EN61326-1;2006년; Class A) | |
| Conformity | | RoHS, WEEE, UL | |
| Warranty | | 3 years | |



Subject to change without notice

| Model | | MC-A160M-154 | MC-A160K-154 |
|---|---|---|---|
| Sensor | | Sony CMOS Pregius IMX 273 | |
| Sensor size | | 1/2.9" | |
| Pixel size (㎛) | | 3.45 x 3.45 | |
| Resolution | | 1440 x 1080 | |
| Frame Rate (Max.) | | 154fps | |
| Color / Mono | | Mono Chrome | Color |
| Scanning method | | Full / ROI / Reverse (x, y, all) / Decimation (Horizontal + Vertical) / Binning (Only Mono models) | |
| Synchronization | | Internal (Freerun), External (CC1 or Circular), Software trigger via PC | |
| Trigger modes | | Timed, Trigger width | |
| Shutter | | Global | |
| Shutter speed | | 1us ~ 3sec (Exposure Offset : 별도) | |
| Gain | | Analog : 0dB ~ 24dB (1x ~ 15.8x)<br>Digital : 0dB ~ 18dB (1x ~ 8x) | |
| Black level | | Analog : 0 ~ 255 (ADC 8bit) 0 ~ 1023 (ADC 10bit) 0 ~ 4095 (ADC 12bit)<br>Digital : 0 ~ 1023 (10bit) | |
| Gamma / LUT | | Gamma Correction, Adjustable LUT (10bit to 10bit) | |
| Auto white balance | | Off / Once / Continuous (Only Color Models) | |
| Auto gain / exposure | | Off / Once / Continuous | |
| Interface | | Mini CameraLink™, PoCL | |
| Pixel Data Format | | Mono8/10 | Mono8/10, Bayer8/10, RGB8 |
| SNR | | 31dB | 35dB |
| Function control | | GainAuto, ExposureAuto, BalanceWhiteAuto, Acquisition Frame Rate (Adjustable), Shading Correction (FFC), Noise Reduction Filter | |
| Lens mount | | C mount | |
| Power requirements | | DC 12V ~ 24V ± 10% or PoCL | |
| Consumption | DC | < 2.1W | |
| | PoCL | | |
| Weight | | < 44g | |
| Dimension (mm) | | 29 x 29 x 29 (without mount) | |
| Temperature | | 0℃ ~ 45℃ (Operating) / -20℃ ~ 60℃ (Storage)-(with < 20 ~ 80% RH) | |
| Vibration / Shock | | 98m/s$^2$ (10G) / 196m/s$^2$ (20.0G) | |
| Standard compliancy | | CE (EN61326-1;2006년; Class A) | |
| Conformity | | RoHS, WEEE, UL | |
| Warranty | | 3 years | |

| Model | | MC-A320M-55 | MC-A320K-55 |
|---|---|---|---|
| Image sensor | | Sony CMOS Pregius IMX 265 | |
| Sensor size | | 1/1.8" | |
| Pixel size (㎛) | | 3.45 x 3.45 | |
| Resolution | | 2048 x 1536 / 3Tap : 2040 x 1536 | |
| Frame Rate (Max.) | | 55fps | |
| Color / Mono | | Mono Chrome | Color |
| Scanning method | | Full / ROI / Reverse (x, y, all) / Decimation (Horizontal + Vertical) | |
| Synchronization | | Internal (Freerun), External (CC1 or Circular), Software trigger via PC | |
| Trigger modes | | Timed, Trigger width | |
| Shutter | | Global | |
| Shutter speed | | 1us ~ 3sec (Exposure Offset : 별도) | |
| Gain | | Analog : 0dB ~ 24dB (1x ~ 15.8x)<br>Digital : 0dB ~ 18dB (1x ~ 8x) | |
| Black level | | Analog : 0 ~ 4095 (12bit)<br>Digital : 0 ~ 1023 (10bit) | |
| Gamma / LUT | | Gamma Correction, Adjustable LUT (10bit to 10bit) | |
| Auto white balance | | Off / Once / Continuous (Only Color Models) | |
| Auto gain / exposure | | Off / Once / Continuous | |
| Interface | | Mini CameraLink™, PoCL | |
| Pixel Data Format | | Mono8/10 | Mono8/10, Bayer8/10, RGB8 |
| SNR | | 36dB | 40dB |
| Function control | | GainAuto, ExposureAuto, BalanceWhiteAuto, Acquisition Frame Rate (Adjustable),<br>Shading Correction (FFC), Noise Reduction Filter | |
| Lens mount | | C mount | |
| Power requirements | | DC 12V ~ 24V ± 10% or PoCL | |
| Consumption | DC | < 2.1W | |
| | PoCL | | |
| Weight | | < 44g | |
| Dimension (mm) | | 29 x 29 x 29 (without mount) | |
| Temperature | | 0℃ ~ 45℃ (Operating) / -20℃ ~ 60℃ (Storage)-(with < 20 ~ 80% RH) | |
| Vibration / Shock | | 98m/s$^2$ (10G) / 196m/s$^2$ (20.0G) | |
| Standard compliancy | | CE (EN61326-1;2006년; Class A) | |
| Conformity | | RoHS, WEEE, UL | |
| Warranty | | 3 years | |



Subject to change without notice

| Model | | MC-A500M-35 | MC-A500K-35 |
|---|---|---|---|
| Sensor | | Sony CMOS Pregius IMX 264 | |
| Sensor size | | 2/3" | |
| Pixel size (㎛) | | 3.45 x 3.45 | |
| Resolution | | 2448 x 2048 | |
| Frame Rate (Max.) | | 35fps | |
| Color / Mono | | Mono Chrome | Color |
| Scanning method | | Full / ROI / Reverse (x, y, all) / Decimation (Horizontal + Vertical) | |
| Synchronization | | Internal (Freerun), External (CC1 or Circular), Software trigger via PC | |
| Trigger modes | | Timed, Trigger width | |
| Shutter | | Global | |
| Shutter speed | | 1us ~ 3sec (Exposure Offset : 별도) | |
| Gain | | Analog : 0dB ~ 24dB (1x ~ 15.8x)<br>Digital : 0dB ~ 18dB (1x ~ 8x) | |
| Black level | | Analog : 0 ~ 4095 (12bit)<br>Digital : 0 ~ 1023 (10bit) | |
| Gamma / LUT | | Gamma Correction, Adjustable LUT (10bit to 10bit) | |
| Auto white balance | | Off / Once / Continuous (Only Color Models) | |
| Auto gain / exposure | | Off / Once / Continuous | |
| Interface | | Mini CameraLink™, PoCL | |
| Pixel Data Format | | Mono8/10 | Mono8/10, Bayer8/10, RGB8 |
| SNR | | 37dB | 41dB |
| Function control | | GainAuto, ExposureAuto, BalanceWhiteAuto, Acquisition Frame Rate (Adjustable),<br>Shading Correction (FFC), Noise Reduction Filter | |
| Lens mount | | C mount | |
| Power requirements | | DC 12V ~ 24V ± 10% or PoCL | |
| Consumption | DC | < 2.1W | |
| | PoCL | | |
| Weight | | < 44g | |
| Dimension (mm) | | 29 x 29 x 29 (without mount) | |
| Temperature | | 0℃ ~ 45℃ (Operating) / -20℃ ~ 60℃ (Storage)-(with < 20 ~ 80% RH) | |
| Vibration / Shock | | 98m/s$^2$ (10G) / 196m/s$^2$ (20.0G) | |
| Standard compliancy | | CE (EN61326-1;2006년; Class A) | |
| Conformity | | RoHS, WEEE, UL | |
| Warranty | | 3 years | |

| Model | | MC-A121M-20 | MC-A121K-20 |
|---|---|---|---|
| Image sensor | | Sony CMOS Pregius IMX 304 | |
| Sensor size | | 1.1" | |
| Pixel size (㎛) | | 3.45 x 3.45 | |
| Resolution | | 4096 x 3000 / 3Tap : 4080 x 3000 | |
| Frame Rate (Max.) | | 20fps | |
| Color / Mono | | Mono Chrome | Color |
| Scanning method | | Full / ROI / Reverse (x, y, all) / Decimation (Horizontal + Vertical) | |
| Synchronization | | Internal (Freerun), External (CC1 or Circular), Software trigger via PC | |
| Trigger modes | | Timed, Trigger width | |
| Shutter | | Global | |
| Shutter speed | | 1us ~ 3sec (Exposure Offset : 별도) | |
| Gain | | Analog : 0dB ~ 24dB (1x ~ 15.8x)<br>Digital : 0dB ~ 18dB (1x ~ 8x) | |
| Black level | | Analog : 0 ~ 4095 (12bit)<br>Digital : 0 ~ 1023 (10bit) | |
| Gamma / LUT | | Gamma Correction, Adjustable LUT (10bit to 10bit) | |
| Auto white balance | | Off / Once / Continuous (Only Color Models) | |
| Auto gain / exposure | | Off / Once / Continuous | |
| Interface | | Mini CameraLink™, PoCL | |
| Pixel Data Format | | Mono8/10 | Mono8/10, Bayer8/10, RGB8 |
| SNR | | 39dB | 40dB |
| Function control | | GainAuto, ExposureAuto, BalanceWhiteAuto, Acquisition Frame Rate (Adjustable),<br>Shading Correction (FFC), Noise Reduction Filter | |
| Lens mount | | C mount | |
| Power requirements | | DC 12V ~ 24V ± 10% or PoCL | |
| Consumption | DC | < 2.3W | |
| | PoCL | | |
| Weight | | < 44g | |
| Dimension (mm) | | 29 x 29 x 29 (without mount) | |
| Temperature | | 0℃ ~ 45℃ (Operating) / -20℃ ~ 60℃ (Storage)-(with < 20 ~ 80% RH) | |
| Vibration / Shock | | 98m/s$^2$ (10G) / 196m/s$^2$ (20.0G) | |
| Standard compliancy | | CE (EN61326-1;2006년; Class A) | |
| Conformity | | RoHS, WEEE, UL | |
| Warranty | | 3 years | |



Subject to change without notice

| Model | | MC-A121R-20 | MC-A121L-20 |
|---|---|---|---|
| Image sensor | | Sony CMOS Starvis IMX 226 | |
| Sensor size | | 1/1.7" | |
| Pixel size (㎛) | | 1.85 x 1.85 | |
| Resolution | | 4016 x 3036 / 3Tap : 4008 x 3036 | |
| Frame Rate (Max.) | | 20fps | |
| Color / Mono | | Mono Chrome | Color |
| Scanning method | | Full / ROI / Reverse (x, y, all) | |
| Synchronization | | Internal (Freerun), External (CC1 or Circular), Software trigger via PC | |
| Trigger modes | | Timed, Trigger width | |
| Shutter | | Rolling, Global Reset | |
| Shutter speed | | 213.13us ~ 3sec | |
| Gain | | Analog : 0dB ~ 28dB<br>Digital : 0dB ~ 18dB | |
| Black level | | Analog : 0 ~ 255 (10bit)<br>Digital : 0 ~ 1023 (10bit) | |
| Gamma / LUT | | Gamma Correction, Adjustable LUT (10bit to 10bit) | |
| Auto white balance | | Off / Once / Continuous (Only Color Models) | |
| Auto gain / exposure | | Off / Once / Continuous | |
| Interface | | Mini CameraLink™, PoCL | |
| Pixel Data Format | | Mono8/10 | Mono8/10, Bayer8/10, RGB8 |
| SNR | | 38dB | 41dB |
| Function control | | GainAuto, ExposureAuto, BalanceWhiteAuto, Acquisition Frame Rate (Adjustable),<br>Shading Correction (FFC), Noise Reduction Filter | |
| Lens mount | | C mount | |
| Power requirements | | DC 12V ~ 24V ± 10% or PoCL | |
| Consumption | DC | < 1.9W | |
| | PoCL | | |
| Weight | | < 44g | |
| Dimension (mm) | | 29 x 29 x 29 (without mount) | |
| Temperature | | 0℃ ~ 45℃ (Operating) / -20℃ ~ 60℃ (Storage)-(with < 20 ~ 80% RH) | |
| Vibration / Shock | | 98m/s$^2$ (10G) / 196m/s$^2$ (20.0G) | |
| Standard compliancy | | CE (EN61326-1:2006년; Class A) | |
| Conformity | | RoHS, WEEE, UL | |
| Warranty | | 3 years | |

# Cameralink Cameras (Full)

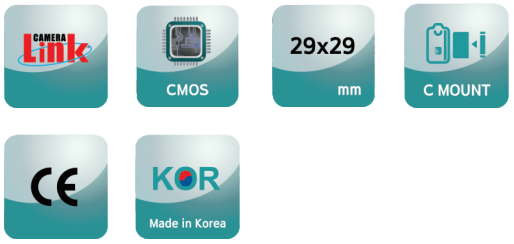


Pregius



## Key Features

Mini-size CMOS CameraLink camera
Standard cameralink interface
Supporting PoCL

## Pin map

| Pin No. | Name | IN/OUT | Description |
|---|---|---|---|
| 1 | PWR | IN | 10.8V~26.4V Input Range |
| 2 | GPIO1 | IN/OUT | TTL Input / Output |
| 3 | GPIO2 | IN/OUT | TTL Input / Output |
| 4 | GND | IN | Power GND |

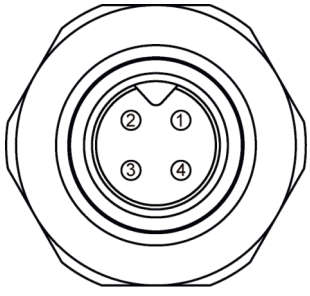


## Dimension (Unit : mm)

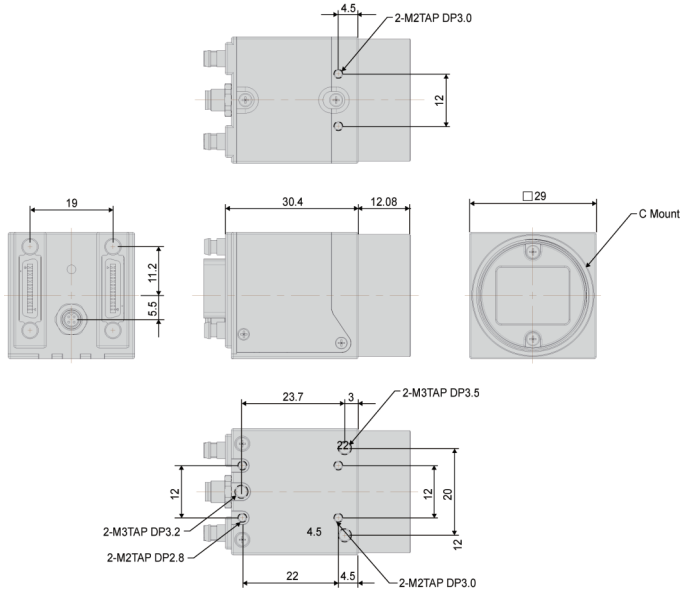


## Download (File name)

ex) SDK download:
CREVIS Site ▶ Search window ▶ File name

CL-Installation Guide : cameralink_manual.zip
Camfile : cameralink_camfile.zip
CamguideCL : camguideCL.zip



Subject to change without notice

| Model | | MC-A500M-163 | MC-A500K-163 |
|---|---|---|---|
| Image sensor | | Sony CMOS Pregius IMX 250 | |
| Sensor size | | 2/3" | |
| Pixel size (㎛) | | 3.45 x 3.45 | |
| Resolution | | 2464 x 2056 / 10Tap : 2440 x 2056 | |
| Frame Rate (Max.) | | 163fps | |
| Color / Mono | | Mono Chrome | Color |
| Scanning method | | Full / ROI / Reverse (x, y, all) / Decimation (Horizontal + Vertical) / Binning (Vertical)<br>Binning (Only Mono models) | |
| Synchronization | | Internal (Freerun), External (CC1 ~ CC4), Software trigger via PC | |
| Trigger modes | | Timed, Trigger width | |
| Shutter | | Global | |
| Shutter speed | | 1us ~ 3sec (Exposure Offset : 별도) | |
| Gain | | Analog : 0dB ~ 24dB (1x ~ 15.8x)<br>Digital : 0dB ~ 18dB (1x ~ 8x) | |
| Black level | | Analog : 0 ~ 1023 (10bit)<br>Digital : 0 ~ 1023 (10bit) | |
| Gamma / LUT | | Gamma Correction, Adjustable LUT (10bit to 10bit) | |
| Auto white balance | | Off / Once / Continuous (Only Color Models) | |
| Auto gain / exposure | | Off / Once / Continuous | |
| Interface | | Mini CameraLink™, PoCL | |
| Pixel Data Format | | Mono8/10 | Mono8/10, Bayer8/10 |
| SNR | | 39dB | 40dB |
| Function control | | GainAuto, ExposureAuto, BalanceWhiteAuto, Acquisition Frame Rate (Adjustable),<br>Shading Correction (FFC), Noise Reduction Filter | |
| Lens mount | | C mount | |
| Power requirements | | DC 12V ~ 24V ± 10% or PoCL | |
| Consumption | DC | < 2.2W | |
| | PoCL | | |
| Weight | | < 47g | |
| Dimension (mm) | | 29 x 29 x 29 (without mount) | |
| Temperature | | 0℃ ~ 45℃ (Operating) / -20℃ ~ 60℃ (Storage)- (with < 20 ~ 80% RH) | |
| Vibration / Shock | | 98m/s$^2$ (10G) / 196m/s$^2$ (20.0G) | |
| Standard compliancy | | CE (EN61326-1;2006년; Class A) | |
| Conformity | | RoHS, WEEE, UL | |
| Warranty | | 3 years | |

| Model | MC-A121M-67 | MC-A121K-67 |
|---|---|---|
| Image sensor | Sony CMOS Pregius IMX 253 | |
| Sensor size | 1.1" | |
| Pixel size (㎛) | 3.45 x 3.45 | |
| Resolution | 4096 x 3000 / 10Tap : 4080 x 3000 | |
| Frame Rate (Max.) | 67fps | |
| Color / Mono | Mono Chrome | Color |
| Scanning method | Full / ROI / Reverse (X,Y,All) / Decimation (Horizontal + Vertical) / Binning Vertical, Binning Horizontal Vertical (Only Mono Models) | |
| Synchronization | Internal (Freerun), External (CC1 ~ CC4), Software trigger via PC | |
| Trigger modes | Timed, Trigger width | |
| Shutter | Global | |
| Shutter speed | 1us ~ 3sec (Exposure Offset : 별도) | |
| Gain | Analog : 0dB ~ 24dB (1x ~ 15.8x)<br>Digital : 0dB ~ 18dB (1x ~ 8x) | |
| Black level | Analog : 0 ~ 1023 (10bit)<br>Digital : 0 ~ 1023 (10bit) | |
| Gamma / LUT | Gamma Correction, Adjustable LUT (10bit to 10bit) | |
| Auto white balance | Off / Once / Continuous (Only Color Models) | |
| Auto gain / exposure | Off / Once / Continuous | |
| Interface | Mini CameraLink™, PoCL | |
| Pixel Data Format | Mono8/10 | Mono8/10, Bayer8/10 |
| SNR | 38dB | 42dB |
| Function control | GainAuto, ExposureAuto, BalanceWhiteAuto, Acquisition Frame Rate (Adjustable), Shading Correction (FFC), Noise Reduction Filter | |
| Lens mount | C mount | |
| Power requirements | DC 12V ~ 24V ± 10% or PoCL | |
| Consumption DC | < 2.6W | |
| Consumption PoCL | < 2.6W | |
| Weight | < 47g | |
| Dimension (mm) | 29 x 29 x 29 (without mount) | |
| Temperature | 0℃ ~ 45℃ (Operating) / -20℃ ~ 60℃ (Storage)-(with < 20 ~ 80% RH) | |
| Vibration / Shock | 98m/s$^2$ (10G) / 196m/s$^2$ (20.0G) | |
| Standard compliancy | CE (EN61326-1;2006년; Class A) | |
| Conformity | RoHS, WEEE, UL | |
| Warranty | 3 years | |



Subject to change without notice