# Cameralink Cameras

## 25Mega Pixel

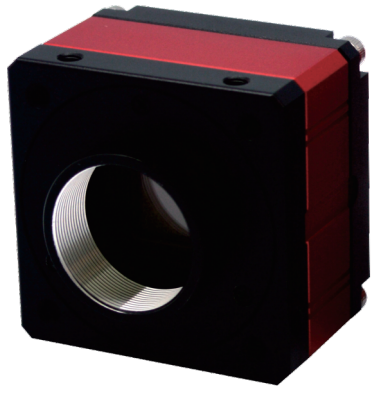

## Key Features

High resolution CMOS Cameralink Camera
Higher frame rates with AOI
Standard cameralink interface
Trigger input range : +2.7V~3.3V(TTL), +3.3V~24V(Photo coupler)

## Pin map

6pin Connector

| Pin No. | Name | IN/OUT | Description |
|---|---|---|---|
| 1 | PWR | IN | 10.8V~26.4V Input Range |
| 2 | GPIO1 | IN/OUT | Line5 |
| 3 | GPIO2 | IN/OUT | Line6 |
| 4 | GND | IN | I/O GND |
| 5 | NC | - | - |
| 6 | GND | IN | Power GND |

## Dimension (Unit : mm)

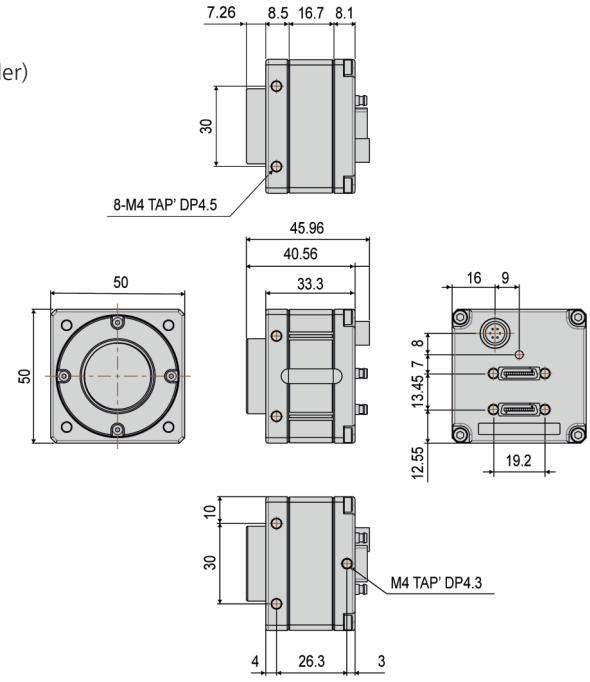


## Download (File name)

ex) SDK download:
CREVIS Site ▶ Search window ▶ File name

CL-Installation Guide : cameralink_manual.zip
Camfile : cameralink_camfile.zip
CamguideCL : camguideCL.zip

| Model | HC-F251M-31 | HC-F251K-31 |
|---|---|---|
| Sensor | GMAX0505 25M | |
| Sensor size | 1.1" | |
| Pixel size (㎛) | 2.5 x 2.5 | |
| Resolution | 5120 x 5120 | |
| CameraLink Pixel Freq. | 2, 3, 4, 8, 10Tap : 85MHz | |
| Frame Rate (Max.) | 31.7fps | |
| Color / Mono | Mono Chrome | Color |
| Scanning method | Full / Single ROI / Multi ROI / Reverse (X,Y,All) / Decimation Vertical | |
| Synchronization | Internal (Freerun), External (CC1 ~ CC4 or Circular), Software trigger via PC | |
| Trigger modes | Fixed shutter, Pulse width shutter | |
| Shutter | Global Shutter | |
| Shutter speed | 1us ~ 3sec (ExposureOffset : 별도) | |
| Gain | Digital : 0dB ~ 12dB (1x ~ 4x) | |
| Black level | Analog : 0 ~ 2047 / Digital : 0 ~ 1023 (10bit) | |
| Gamma / LUT | Gamma Correction (0 ~ 3.999) / Adjustable LUT (10bit to 10bit) | |
| Interface | CameraLink x 2 (PoCL support) | |
| Pixel data formats | Mono8 | Bayer8 |
| SNR | 37dB | |
| Function control | GainAuto, ExposureAuto, Acquisition Frame Rate (Adjustable),<br>DefectPixelCorrection, Shading Correction (FFC, Under 8tap) | |
| Lens mount | C mount | |
| Power requirements | DC (12V ~ 24V ± 10%) or PoCL | |
| Consumption | < 6.0W | |
| Weight | 142g | |
| Dimension (mm) | 50 x 50 x 33.3 (Without Mount, Connector) | |
| Temperature | 0℃ ~ + 40℃ / -5℃ ~ + 45℃ (with < 20 ~ 80% RH) | |
| Vibration / Shock | 98m/s$^2$ (10G) / 196m/s$^2$ (20.0G) | |
| Standard compliancy | CE (EN61326-1; 2013; Class A) | |
| Conformity | RoHS, WEEE, UL | |
| Warranty | 3 years | |



Subject to change without notice