2026

CREVIS

Machine Vision Cameras



www.crevis.co.kr

GiGE VISION® CAMERA Link CoaXPress USB3 VISION®





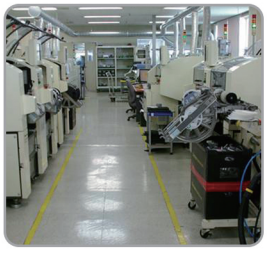

Machine Vision Camera Manufacturer in Korea

Established in 2000. 09

Total Automation Solution
End-to-end solutions covering vision, control, and motion for process automation.

Strong R&D Capability
Over 40% of workforce dedicated to R&D, with extensive ODM/OEM experience and full customization support.

Domestic Manufacturer (Crevis)
Faster and more responsive technical support than overseas competitors, with competitive pricing and minimal FX impact.

Stable Quality & Delivery
In-house SMT lines, clean room facilities, and controlled temperature/humidity material management.

Certified to Global Standards : CE, RoHS, UL, FCC

Subject to change without notice

1. 신규 SDK 출시 (cvsCam)

A. 지원 인터페이스 : GigE Vision, USB3.0

B. eBus 드라이버 적용 : CPU 부하 감소 및 안정성 향상

C. Windws, Linux OS 및 Python 개발 환경 지원

2. 크래비스 비전 라이브러리 출시 (CVS Vision Library)

A. 템플릿 매치, BLOB, 치수측정, BCR 등 20여개의 툴 제공

B. 크래비스 카메라 사용 시 무상 제공

1. New SDK Release (cvsCam)

A. Supports GigE Vision and USB 3.0 interfaces

B. Integrated eBus driver for reduced CPU load and improved stability

C. Compatible with Windows, Linux, and Python development environments

2. CVS Vision Library Release

A. Provides 20+ vision tools, including template matching, BLOB analysis, dimensional measurement, and barcode reading (BCR)

B. Free of charge when used with Crevis cameras

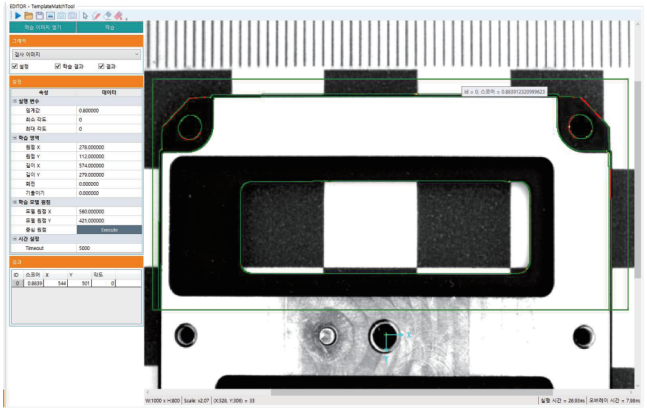

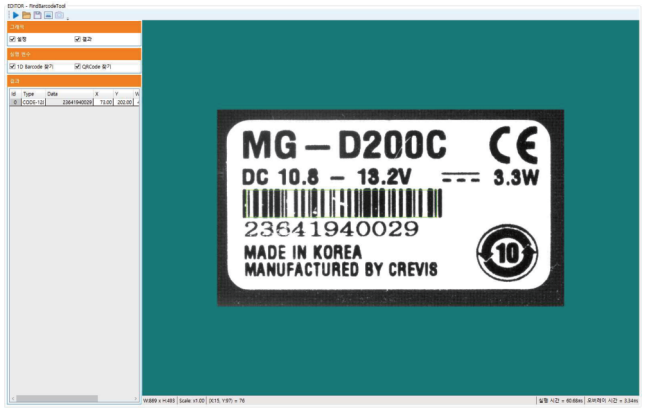

Camera Comparison Chart

Special

Page.6 ~

Interface	Model	Resolution	Imaging	Optical Format	fps	Dimension (mm)
GigE	HG-A130SW	1296 x 1032	SWIR	1/2	72	55 x 55 x 74
GigE	HG-T130SW	1236 x 960	SWIR	2/3	50	55 x 55 x 85
CameraLink	HC-A130SW	1296 x 1032	SWIR	1/2	134	55 x 55 x 74
CXP-12	HX-A130SW	1296 x 1032	SWIR	1/2	134	55 x 55 x 74
CXP-12	HX-A530SW	2592 x 2056	SWIR	1/1.4	131	55 x 55 x 74
GigE	MG-A500P-22	2464 x 2056	Polarization	2/3	22	29 x 29 x 40
GigE	MG-A121P-9	4112 x 3008	Polarization	1.1	9	29 x 29 x 40
CameraLink	MC-A500P-163	2464 x 2056	Polarization	2/3	163	29 x 29 x 29
CameraLink	MC-A121P-67	4096 x 3000	Polarization	1.1	67	29 x 29 x 29
CameraLink	TC-A160K-102	1456 x 1088	3-CMOS	1/2.9	102	44 x 44 x 63

GiGE VISION

Page.17 ~

Interface	Model	Resolution (HxV)	Color	Optical Format	fps	Dimension (mm)
GigE	MG-A040M-280	728 x 544	Mono	1/2.9	280	29 x 29 x 40
GigE	MG-A040K-280	728 x 544	Color	1/2.9	280	29 x 29 x 40
GigE	MG-A160M-72	1456 x 1088	Mono	1/2.9	72	29 x 29 x 40
GigE	MG-A160K-72	1456 x 1088	Color	1/2.9	72	29 x 29 x 40
GigE	MG-A320M-35	2064 x 1544	Mono	1/1.8	35	29 x 29 x 40
GigE	MG-A320K-35	2064 x 1544	Color	1/1.8	35	29 x 29 x 40
GigE	MG-A500M-22	2464 x 2056	Mono	2/3	22	29 x 29 x 40
GigE	MG-A500K-22	2464 x 2056	Color	2/3	22	29 x 29 x 40
GigE	MG-A121M-9	4112 x 3008	Mono	1.1	9	29 x 29 x 40
GigE	MG-A121K-9	4112 x 3008	Color	1.1	9	29 x 29 x 40
GigE	MG-A600R-17	3088 x 2072	Mono	1/1.8	17	29 x 29 x 40
GigE	MG-A600L-17	3088 x 2072	Color	1/1.8	17	29 x 29 x 40
GigE	MG-A121R-9	4024 x 3036	Mono	1/1.7	9	29 x 29 x 40
GigE	MG-A121L-9	4024 x 3036	Color	1/1.7	9	29 x 29 x 40
GigE	MG-A201R-5	5496 x 3672	Mono	1	5	29 x 29 x 40
GigE	MG-A201L-5	5496 x 3672	Color	1	5	29 x 29 x 40
GigE	MG-A500M-FL	2472 x 2064	Mono	1/1.8	22	29 x 29 x 40
GigE	MG-A500K-FL	2472 x 2064	Color	1/1.8	22	29 x 29 x 40
GigE	MG-A121M-FL	4128 x 3008	Mono	1/1.1	9	29 x 29 x 40
GigE	MG-A121K-FL	4128 x 3008	Color	1/1.1	9	29 x 29 x 40
GigE	MG-A161M-FL	5328 x 3040	Mono	1.1	7	29 x 29 x 40
GigE	MG-A161K-FL	5328 x 3040	Color	1.1	7	29 x 29 x 40
GigE	MG-A241M-FL	5328 x 4608	Mono	1.2	4	29 x 29 x 40
GigE	MG-A241K-FL	5328 x 4608	Color	1.2	4	29 x 29 x 40

CAMERA Link

Page.30 ~

Interface	Model	Resolution (HxV)	Color	Optical Format	fps	Dimension (mm)
Cameralink	MC-A040M-523	720x540	Mono	1/2.9	523	29 x 29 x 29
Cameralink	MC-A040K-523	720x540	Color	1/2.9	523	29 x 29 x 29
Cameralink	MC-A160M-154	1440 x 1080	Mono	1/2.9	154	29 x 29 x 29
Cameralink	MC-A160K-154	1440 x 1080	Color	1/2.9	154	29 x 29 x 29
Cameralink	MC-A320M-55	2048 x 1536	Mono	1/1.8	55	29 x 29 x 29
Cameralink	MC-A320K-55	2048 x 1536	Color	1/1.8	55	29 x 29 x 29
Cameralink	MC-A500M-35	2448 x 2048	Mono	2/3	35	29 x 29 x 29
Cameralink	MC-A500K-35	2448 x 2048	Color	2/3	35	29 x 29 x 29

Subject to change without notice

Camera Comparison Chart

Page.30 ~

Interface	Model	Resolution (HxV)	Color	Optical Format	fps	Dimension (mm)
Cameralink	MC-A121M-20	4096 x 3000	Mono	1.1	20	29 x 29 x 29
Cameralink	MC-A121K-20	4096 x 3000	Color	1.1	20	29 x 29 x 29
Cameralink	MC-A121R-20	4016 x 3036	Mono	1/1.7	20	29 x 29 x 29
Cameralink	MC-A121L-20	4016 x 3036	Color	1/1.7	20	29 x 29 x 29
Cameralink	MC-A500M-163	2464 x 2056	Mono	2/3	163	29 x 29 x 29
Cameralink	MC-A500K-163	2464 x 2056	Color	2/3	163	29 x 29 x 29
Cameralink	MC-A121M-67	4096 x 3000	Mono	1.1	67	29 x 29 x 29
Cameralink	MC-A121K-67	4096 x 3000	Color	1.1	67	29 x 29 x 29
Cameralink	HC-F251M-31	5120 x 5120	Mono	1.1	31	50 x 50 x 34
Cameralink	HC-F251K-31	5120 x 5120	Color	1.1	31	50 x 50 x 34

Page.42 ~

Interface	Model	Resolution	Color	Optical Format	fps	Dimension (mm)
CXP-6	MX-A040M-523	720 x 540	Mono	1/2.9	523	29 x 29 x 29
CXP-6	MX-A040K-523	720 x 540	Color	1/2.9	523	29 x 29 x 29
CXP-6	MX-A160M-276	1440 x 1080	Mono	1/2.9	276	29 x 29 x 29
CXP-6	MX-A160K-276	1440 x 1080	Color	1/2.9	276	29 x 29 x 29
CXP-6	MX-A320M-184	2064 x 1544	Mono	1/1.8	184	29 x 29 x 29
CXP-6	MX-A320K-184	2064 x 1544	Color	1/1.8	184	29 x 29 x 29
CXP-6	MX-A500M-116	2464 x 2056	Mono	2/3	116	29 x 29 x 29
CXP-6	MX-A500K-116	2464 x 2056	Color	2/3	116	29 x 29 x 29
CXP-6	MX-A890M-66	4096 x 2176	Mono	1	66	29 x 29 x 29
CXP-6	MX-A890K-66	4096 x 2176	Color	1	66	29 x 29 x 29
CXP-6	MX-A121M-23	4096 x 3000	Mono	1.1	23	29 x 29 x 29
CXP-6	MX-A121K-23	4096 x 3000	Color	1.1	23	29 x 29 x 29
CXP-6	MX-A121M-48	4096 x 3000	Mono	1.1	48	29 x 29 x 29
CXP-6	MX-A121K-48	4096 x 3000	Color	1.1	48	29 x 29 x 29
CXP-6	MX-A121R-43	4016 x 3036	Mono	1/1.7	43	29 x 29 x 29
CXP-6	MX-A121L-43	4016 x 3036	Color	1/1.7	43	29 x 29 x 29
CXP-6	MX-A201R-26	5488 x 3672	Mono	1	26	29 x 29 x 29
CXP-6	MX-A201L-26	5488 x 3672	Color	1	26	29 x 29 x 29
CXP-12	HX-F251M-150	5120 x 5120	Mono	1.1	150	80 x 80 x 41
CXP-12	HX-F251K-150	5120 x 5120	Color	1.1	150	80 x 80 x 41
CXP-12	HX-A241M-94	5328 x 4608	Mono	1.2	94	50 x 50 x 34
CXP-12	HX-F251M-75	5120 x 5120	Mono	1.1	75	50 x 50 x 34
CXP-12	HX-E671M-65	8192 x 8192	Mono	APS-C	65	80 x 80 x 44
CXP-12	HX-E671K-65	8192 x 8192	Color	APS-C	65	80 x 80 x 44

Page.58 ~

Interface	Model	Resolution	Color	Optical Format	fps	Dimension (mm)
USB3.0	MU-A040M-523	728 x 544	Mono	1/2.9	523	29 x 29 x 29
USB3.0	MU-A040K-523	728 x 544	Color	1/2.9	523	29 x 29 x 29
USB3.0	MU-A160M-226	1456 x 1088	Mono	1/2.9	226	29 x 29 x 29
USB3.0	MU-A160K-226	1456 x 1088	Color	1/2.9	226	29 x 29 x 29
USB3.0	MU-A320M-118	2064 x 1544	Mono	1/1.8	118	29 x 29 x 29
USB3.0	MU-A320K-118	2064 x 1544	Color	1/1.8	118	29 x 29 x 29
USB3.0	MU-A320M-55	2064 x 1544	Mono	1/1.8	55	29 x 29 x 29
USB3.0	MU-A320K-55	2064 x 1544	Color	1/1.8	55	29 x 29 x 29

Camera Comparison Chart

USB3 VISION

Page.58 ~

Interface	Model	Resolution	Color	Optical Format	fps	Dimension (mm)
USB3.0	MU-A500M-35	2464 x 2056	Mono	2/3	35	29 x 29 x 29
USB3.0	MU-A500K-35	2464 x 2056	Color	2/3	35	29 x 29 x 29
USB3.0	MU-A500M-75	2464 x 2056	Mono	2/3	70	29 x 29 x 29
USB3.0	MU-A500K-75	2464 x 2056	Color	2/3	70	29 x 29 x 29
USB3.0	MU-A121M-23	4112 x 3008	Mono	1.1	23	29 x 29 x 29
USB3.0	MU-A121K-23	4112 x 3008	Color	1.1	23	29 x 29 x 29
USB3.0	MU-A121R-31	4072 x 3046	Mono	1/1.7	30	29 x 29 x 29
USB3.0	MU-A121L-31	4072 x 3046	Color	1/1.7	30	29 x 29 x 29
USB3.0	MU-A201R-18	5496 x 3672	Mono	1	18	29 x 29 x 29
USB3.0	MU-A201L-18	5496 x 3672	Color	1	18	29 x 29 x 29

LineScan

Page.67 ~

Interface	Model	Resolution	Color	Line Rate	Dimension (mm)
Cameralink	LV-M422C	2048 (H) x 2(V)	Mono	141KHz	50 x 50 x 40
Cameralink	LV-M824C	4096 (H) x 2(V)	Mono	141KHz	50 x 50 x 35.3
Cameralink	LV-M818C	8192 (H) x 1(V)	Mono	75KHz	80 x 80 x 34
Cameralink	LV-M8116C	16384 (H) x 1(V)	Mono	37.5KHz	80 x 80 x 34

Subject to change without notice

SWIR Cameras





Key Features

- Sony InGaAs SWIR IMX990/992
- Supporting Sensor Cooling Auto Mode (TEC)
- Providing Heat sink for optional

Dimension (Unit : mm)

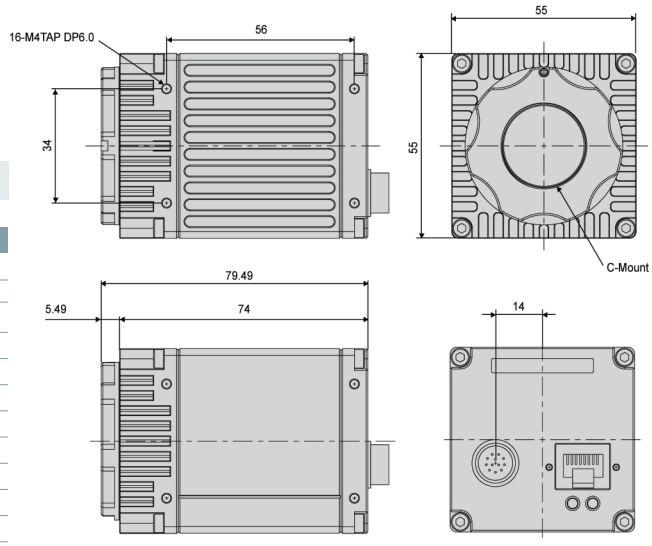

Pin map

No.	Name	IN/OUT	Description
1	GND	IN	Power GND
2	PWR	IN	10.8V ~ 26.4V Input Range
3	GPI2_ISO-	IN	Trigger2 GND
4	GPI2_ISO+	IN	Opto-Isolated Input, Trigger2 Input
5	GPI1_ISO-	IN	Trigger1 GND
6	GPI1_ISO+	IN	Opto-Isolated Input, Trigger1 Input
7	GPIO1	IN/OUT	General Purpose I/O 1
8	GND	IN	GPIO GND
9	-	-	-
10	GPIO2	IN/OUT	General Purpose I/O 2
11	PWR	IN	10.8V ~ 26.4V Input Range
12	GND	IN	Power GND

Spectral Response

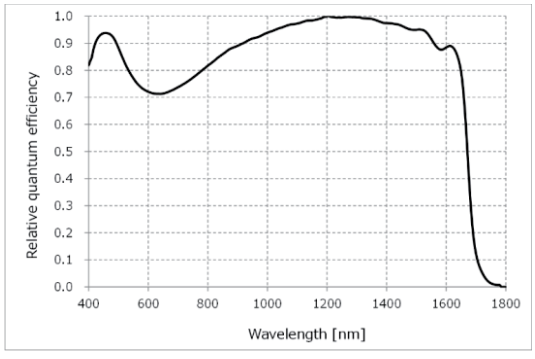

InGaAs SWIR

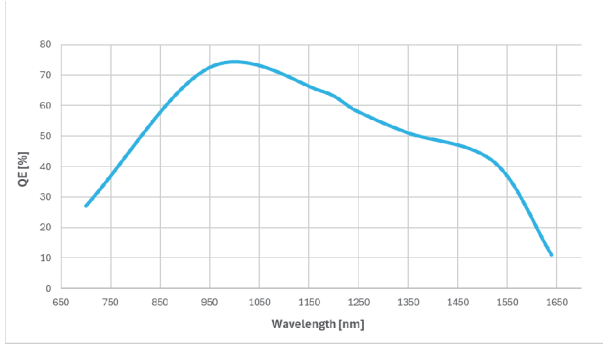

CMOS SWIR

1. 소재 식별 (Material Differentiation)

SWIR 이미징은 가시광에서는 동일해 보이는 물체도 소재 특성에 따라 구분할 수 있습니다.
SWIR imaging distinguishes materials that appear identical in visible light by utilizing their unique SWIR absorption and reflection characteristics.

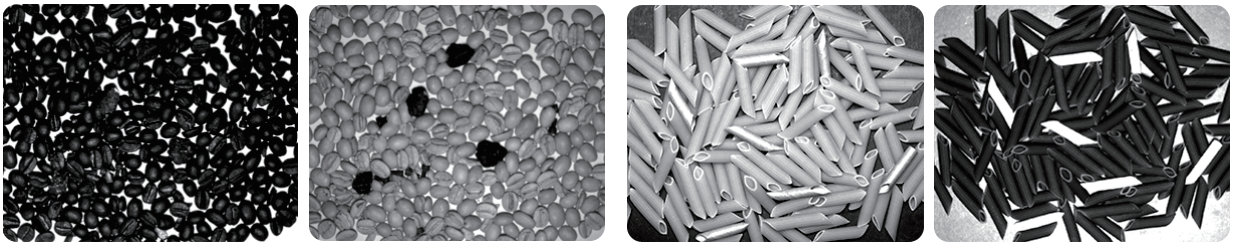

2. 소재 투과 검사 (Material Penetration Inspection)

SWIR 카메라는 실리콘, 웨이퍼, 플라스틱, 안개, 잉크 등을 투과하여 비접촉 검사가 가능합니다.
SWIR cameras enable non-contact inspection through materials such as silicone, wafers, plastics, fog, and inks.

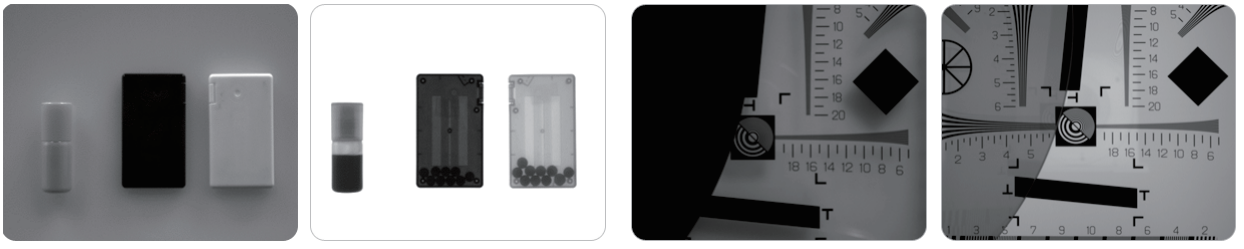

3. 수분 검출 (Moisture Detection)

수분은 SWIR 영역에서 어둡게 나타나며, 이를 통해 정확한 수분 검출이 가능합니다.
Moisture strongly absorbs SWIR wavelengths and appears dark in SWIR images, enabling reliable detection.

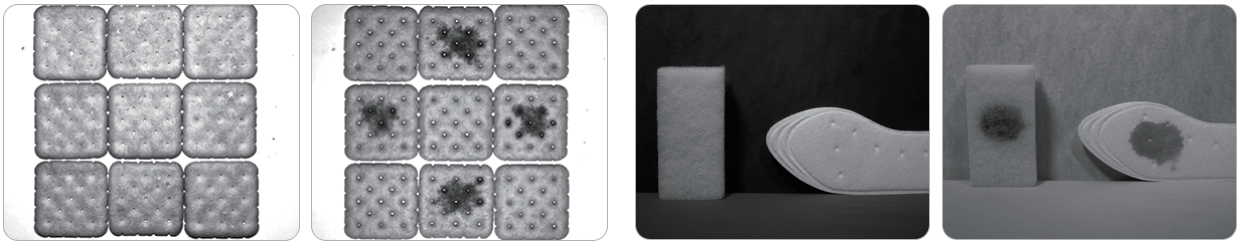

Subject to change without notice

Model	HG-A130SW	HC-A130SW	HX-A130SW
Sensor	Sony InGaAs SWIR IMX990		
Sensor Size	1/2"		
Optical Filter	900nm Long Pass		
Pixel size (㎛)	5 x 5		
Resolution	1296 x 1032		
Frame Rate (Max.)	72fps	134fps	134fps
Scanning Method	Full / ROI / Reverse (X,Y,All) / Decimation (Horizontal + Vertical)	Full / ROI / Reverse (X,Y,All) / Decimation (Horizontal + Vertical) / Binning (X,Y,All)	
Synchronization	Internal (Freerun), External, Software trigger via PC		
Trigger modes	Fixed shutter, Pulse width shutter		
Shutter	Global		
Shutter Speed	13us ~ 1sec	7us ~ 3sec	7us ~ 3sec
Gain	Analog : 0dB ~ 6dB (x1 ~ x2, ADC 8bit), 0dB ~ 18dB (x1~x8, ADC 10/12bit) Digital : 0dB ~ 18dB (x1 ~ x8)		
Black Level	Analog : 0 ~ 255 (ADC 8bit), 1023 (ADC 10bit), 4095 (ADC 12bit) Digital : 0 ~ 4095 (12bit)		
Gamma / LUT	Gamma Correction (0 ~ 3.999), Adjustable LUT (12bit to 12bit)		
Auto Gain / exposure	Off / Once / Continuous		
Interface	GigE Vision	CameraLink	CoaXPress-12 / Micro BNC
Pixel Data Format	Mono8/10/12, Mono10/12 Packed	Mono8/10/12	Mono8/10/12
Function Control	GainAuto, ExposureAuto, Acquisition Frame Rate(Adjustable), Line Debouncer, Defective Pixel Correction, Noise Reduction Filter(Only HG-A130SW), Shading Correction(FFC), Sharpness Enhancement, Contrast/Brightness Control, Sensor Cooling Auto		
Lens mount	C mount		
Power requirements	DC 12~24V or PoE+	DC 12~24V	DC 12~24V or PoCXP
Consumption DC	< 3.8W (PoE : <3.9W)	< 3.8W	< 7.0W
Weight	< 330g	< 400g	< 400g
Dimension (mm)	55 x 55 x 74 (without mount)		
Temperature	0℃ ~ 40℃ (Operating) / -20℃ ~ 60℃ (with < 20 ~ 80% RH) (Storage))		
Vibration / Shock	98m/s^2 (10G) / 196m/s^2 (20.0G)		
Standard compliancy	CE (EN61326-1; 2006년; Class A)		
Conformity	RoHS, WEEE, UL, FCC		
Warranty	3 years		

Model	HX-A530SW
Sensor	Sony InGaAs SWIR IMX992
Sensor size	1/1.4"
Optical Filter	900nm Long Pass
Pixel size (㎛)	3.45 x 3.45
Resolution	2592 x 2056
Frame Rate (Max.)	131fps
Scanning Method	Full / ROI / Reverse (X,Y,All) / Decimation (Horizontal + Vertical) / Binning (X,Y,All)
Synchronization	Internal (Freerun), External, Software trigger via PC
Trigger modes	Fixed shutter, Pulse width shutter
Shutter	Global
Shutter speed	1us ~ 3sec
Gain	Analog : 0dB ~ 24dB (x1 ~ x16) Digital : 0dB ~ 18dB (x1 ~ x8)
Black level	Analog : 0 ~ 255 (ADC 8bit), 1023 (ADC 10bit), 4095 (ADC 12bit) Digital : 0 ~ 4095 (12bit)
Gamma / LUT	Gamma Correction (0 ~ 3.999), Adjustable LUT (12bit to 12bit)
Auto gain / exposure	Off / Once / Continuous
Interface	CoaXPress-12 / Micro BNC
Pixel Data Format	Mono8/10/12
Function control	GainAuto, ExposureAuto, Acquisition Frame Rate(Adjustable), Line Debouncer, Defective Pixel Correction, Shading Correction(FFC), Sharpness Enhancement, Contrast/Brightness Control, Sensor Cooling Auto
Lens mount	C mount
Power requirements	DC 12V ~ 24V or PoCXP
Consumption	< 9.0W
Weight	< 400g
Dimension (mm)	55 x 55 x 74 (without mount)
Temperature	0℃ ~ 40℃ (Operating) / -20℃ ~ 60℃ (Storage) (with < 20~80% RH)
Vibration / Shock	98m/s² (10G) / 196m/s² (20.0G)
Standard compliancy	CE (EN61326-1;2006년; Class A)
Conformity	RoHS, WEEE, UL, FCC
Warranty	3 years

Subject to change without notice

Model	HG-T130SW
Sensor	CMOS SWIR
Sensor size	2/3"
Optical Filter	900nm Long Pass
Pixel size (㎛)	7 x 7
Resolution	1236 x 960
Frame Rate (Max.)	50fps
Scanning Method	Full / ROI
Synchronization	Internal (Freerun), External, Software trigger via PC
Trigger modes	Fixed shutter
Shutter	Global
Shutter speed	100us ~ 200us
Gain	Digital : 0dB ~ 18dB (x1 ~ x8)
Black level	Digital : 0 ~ 4095 (12bit)
Gamma / LUT	Adjustable LUT (12bit to 12bit)
Auto gain / exposure	Off / Once / Continuous
Interface	Ethernet 1000 Base-T (GigE Vision Standard)
Pixel Data Format	Mono8/10/12
Function control	GainAuto, ExposureAuto, Acquisition Frame Rate(Adjustable), Line Debouncer, Defective Pixel Correction, Noise Reduction Filter, Non-Uniformity Correction(NUC) Sharpness Enhancement, Contrast/Brightness Control, Sensor Cooling Auto
Lens mount	C mount
Power requirements	DC 12~24V
Consumption	< 6.0W
Weight	< 400g
Dimension (mm)	55 x 55 x 85 (without mount)
Temperature	0℃ ~ 30℃ (Operating) / -20℃ ~ 45℃ (Storage) (with < 20~80% RH)
Vibration / Shock	98m/s^2 (10G) / 196m/s^2 (20.0G)
Standard compliancy	CE (EN61326-1;2006년; Class A)
Conformity	RoHS, WEEE, FCC
Warranty	3 years

Polarization Cameras

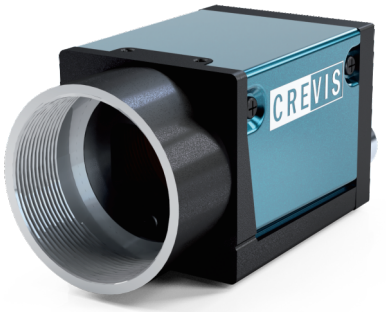

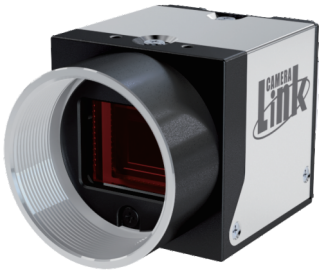

Key Features

- Sony Polarized CMOS Sensor (IMX264/253MZR)
- Interface : GigE, CameraLink
- Resolution : 5MP, 12MP
- Filtering unwanted reflection or glare
- Enhancing contrast
- Stress inspection

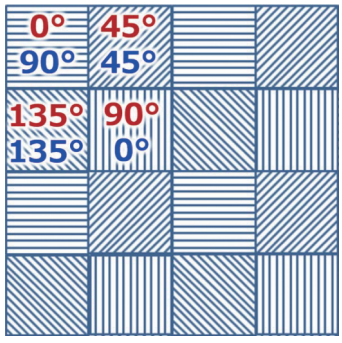

Example Images



Aop

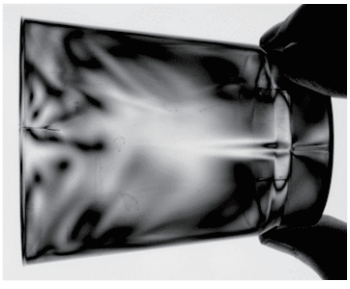

DoIP

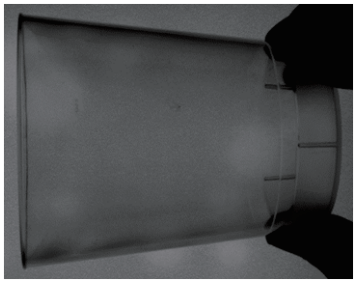

Intensity

Subject to change without notice

Applications

Improving Contrast

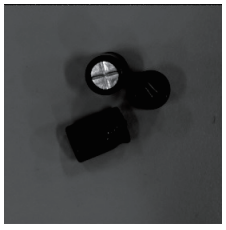
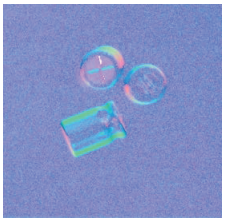

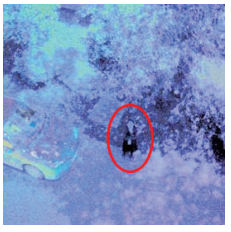
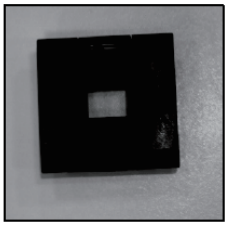
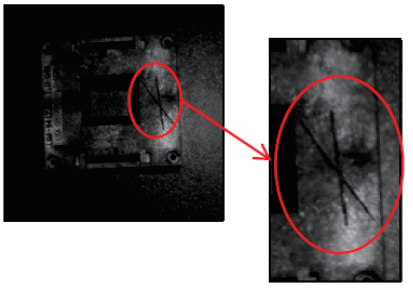

Reduce Reflection



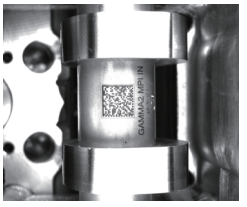
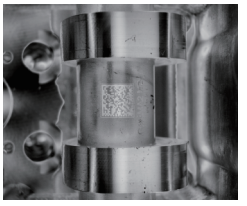

Stress Inspection


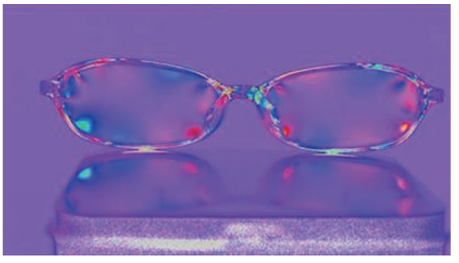

Scratch inspection of transparent material

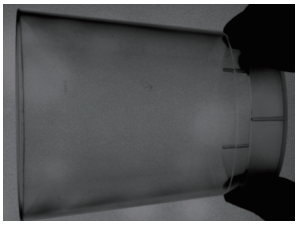
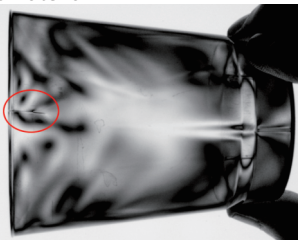

Polarsens

Model		MG-A500P-22	MG-A121P-9
Sensor		Sony CMOS Pregius IMX264MZR	Sony CMOS Pregius IMX253MZR
Sensor size		2/3"	1.1"
Pixel size (㎛)		3.45 x 3.45	
Resolution		2464 x 2056	4112 x 3008
Frame Rate (Max.)		22fps	9fps
Color / Mono		Mono Chrome	
Scanning method		Full / ROI / Reverse (x, y, all)	
Synchronization		Internal (Freerun), External, Software trigger via PC	
Trigger modes		Fixed shutter, Pulse width shutter	
Shutter		Global	
Shutter speed		1us ~ 3sec (Exposure Offset : 별도)	
Gain		Analog : 0dB ~ 32dB (1x ~ 39.8x) Digital : 0dB ~ 24dB (1x ~ 16x)	
Black level		Analog : 0 ~ 4095 (12bit) Digital : 0 ~ 4095 (12bit)	
Gamma / LUT		Gamma Correction, Adjustable LUT (12bit to 12bit)	
Auto gain / exposure		Off / Once / Continuous	
Interface		Ethernet 1000 Base-T (GigE Vision Standard)	
Pixel Data Format		Mono8/10/12, Mono10/12 packed	
SNR		36dB	39dB
Function control		GainAuto, ExposureAuto, Acquisition Frame Rate (Adjustable), Line Debouncer, Noise Reduction Filter	
Lens mount		C mount	
Power requirements		DC 12V ± 10% or PoE (Power over Ethernet 802.3af compliant)	
Consumption	DC	< 3.4W	< 3.6W
	PoE	< 3.85W	< 4.1W
Weight		< 60g	
Dimension (mm)		29 x 29 x 40 (without mount)	
Temperature		0℃ ~ 40℃ (Operating) / -10℃ ~ 50℃ (Storage)-(with < 20 ~ 80% RH)	
Vibration / Shock		98m/s^2 (10G) / 196m/s^2 (20.0G)	
Standard compliancy		CE (EN61326-1;2006년; Class A)	
Conformity		RoHS, WEEE, UL, FCC	
Warranty		3 years	

Subject to change without notice

Polarsens

Model		MC-A500P-163	MC-A121P-67
Sensor		Sony CMOS Pregius IMX 250MZR	Sony CMOS Pregius IMX253MZR
Sensor size		2/3”	1.1”
Pixel size (㎛)		3.45 x 3.45	
Resolution		2464 x 2056 / 10Tap : 2440 x 2056	4096 x 3000 / 10Tap : 4080 x 3000
Frame Rate (Max.)		163fps	67fps
Color / Mono		Mono Chrome	
Scanning method		Full / ROI / Reverse (x, y, all)	Full / ROI / Reverse (x, y, all)
Synchronization		Internal (Freerun), External (CC1 ~ CC4), Software trigger via PC	
Trigger modes		Timed, Trigger width	
Shutter		Global	
Shutter speed		1us ~ 3sec (Exposure Offset : 별도)	
Gain		Analog : 0dB ~ 24dB (1x ~ 15.8x) Digital : 0dB ~ 18dB (1x ~ 8x)	
Black level		Analog : 0 ~ 255 (ADC 8bit) 0 ~ 1023 (ADC 10bit) 0 ~ 4095 (ADC1 2bit) Digital : 0 ~ 1023 (10bit)	
Gamma / LUT		Gamma Correction, Adjustable LUT (10bit to 10bit)	
Auto gain / exposure		Off / Once / Continuous	
Interface		Mini CameraLink™, PoCL	
Pixel data formats		Mono8/10, Bayer8/10, RGB8 Polarization, RGB8 Degree	
Data Output Format		AoP, DoIP, Intensity(S0), 0 degree, 45 degree, 90 degree, 135 degree	
SNR		44dB	
Function control		Acquisition Frame Rate (Adjustable), Noise Reduction Filter	
Lens mount		C mount	
Power requirements		DC 12V ~ 24V ± 10% or PoCL	
Consumption	DC	< 3.2W	< 3.6W
	PoCL		
Weight		< 47g	
Dimension (mm)		29 x 29 x 29 (without mount)	
Temperature		0℃ ~ 45℃ (Operating) / -20℃ ~ 60℃ (Storage)-(with < 20 ~ 80% RH)	
Vibration / Shock		98m/s^2 (10G) / 196m/s^2 (20.0G)	
Standard compliancy		CE (EN61326-1;2006년; Class A)	
Conformity		RoHS, WEEE, UL	
Warranty		3 years	

3CMOS Cameras



Key Features

- Sony Pregius IMX273 (x3)
- High frame rate and advanced color fidelity
- Acquisition of each pixel of RGB values
- * Accurate color values and better resolution as no interpolation process

Pin map

No.	Name	IN/OUT	Description
1	GND	IN	-
2	PWR	IN	10.8V ~ 26.4V Input Range
3	-	-	-
4	-	-	-
5	Trigger -	IN	Opto-Isolated Trigger Input-
6	Trigger +	IN	Opto-Isolated Trigger Input+(2.5V~24V)
7	GPIO_0	IN/OUT	TTL / Input : 3.3V ~ 24V / Out : 3.3V
8	GND	IN	GPIO GND
9	-	-	-
10	GPIO_1	IN/OUT	TTL / Input : 3.3V ~ 24V / Out : 3.3V
11	PWR	IN	10.8V ~ 26.4V Input Range
12	GND	IN	-

Dimension (Unit : mm)

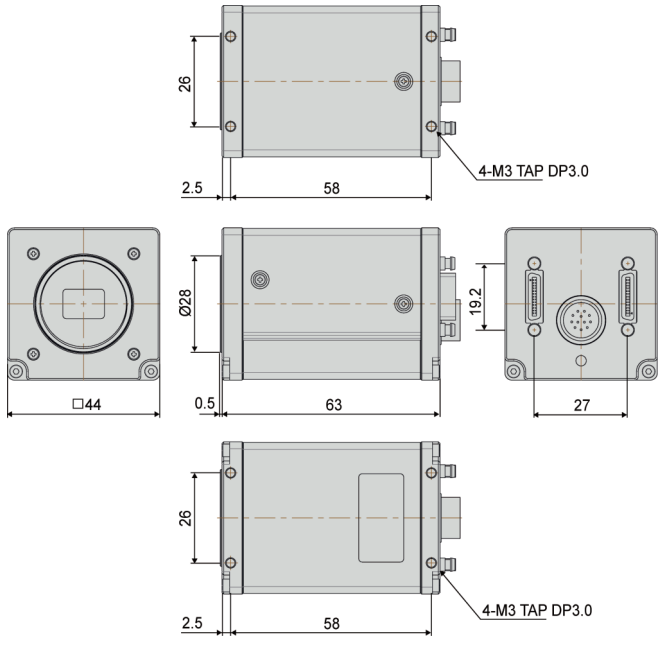

Image Acquisition Method

Single Bayer Sensor

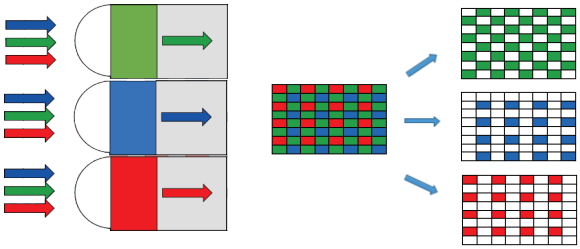

3CMOS Sensor

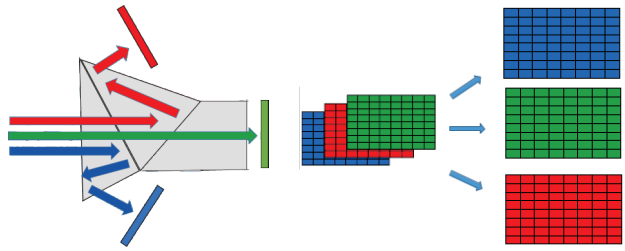

Subject to change without notice

Model		TC-A160K-102
Sensor		Sony CMOS Preigus IMX273
Sensor size		1/2.9”
Pixel size (㎛)		3.45 x 3.45
Resolution		1456 x 1088
Frame Rate (Max.)		102fps
Color / Mono		Color
Scanning method		Full / ROI (Horizontal + Vertical) / Reverse (X,Y,All) / Decimation (X,Y,All) / Binning (Y,All)
Synchronization		Internal (Freerun) or External (CC1 ~ CC4 / Optocoupler In x 1 / GPIO (TTL) x 2 / Software)
Trigger modes		Fixed shutter, Pulse width shutter
Shutter		Global
Shutter speed		1us ~ 3sec (Exposure Offset : 별도)
Gain		Analog : 0dB ~ 36dB (1x ~ 63.1x)
Black level		Analog : 0 ~ 255 (ADC 8bit) 0 ~ 1023 (ADC 10bit) 0 ~ 4095 (ADC 12bit)
Gamma / LUT		Gamma Correction (0 ~ 3.999), Adjustable LUT (12bit to 12bit)
Auto white balance		Off / Once / Continuous
Auto gain / exposure		Off / Once / Continuous
Interface		Mini CameraLink™, PoCL
Pixel Data Format		RGB8/RGB10/RGB12
SNR		35dB
Function control		GainAuto, ExposureAuto, BalanceWhiteAuto, Acquisition Frame Rate (Adjustable), Line Debouncer, Defective Pixel Correction, Shading Correction (FFC), Color Transformation Control, NoiseReduction
Lens mount		C mount
Power requirements		DC 12V ~ 24V ± 10% or PoCL
Consumption	DC	< 4.5W
	PoCL	
Weight		< 163g
Dimension (mm)		44 x 44 x 63 (without mount, Connector)
Temperature		-5℃ ~ 45℃ (Operating) / -20℃ ~ 60℃ (Storage)-(with < 20 ~ 80% RH)
Vibration / Shock		98m/s^2 (10G) / 196m/s^2 (20.0G)
Standard compliancy		CE (EN61326-1;2006년; Class A)
Conformity		RoHS, WEEE
Warranty		3 years

CREVIS

GigE Vision Cameras



Pregius STARVIS



Key Features

Mini-size / CMOS GigE camera
Camera standard
- GenICam, GigE Vision
Trigger input range : +4.5V~24V(Photo coupler)
Supporting PoE
eBus Driver

Pin map

Pin No.	Name	IN/OUT	Description
1	PWR	IN	10.8V ~ 13.2V Input Range
2	Trigger	IN	Opto-Isolated input, Trigger input
3	GND	IN	Strobe GND
4	Strobe	OUT	Opto-Isolated output, Strobe output
5	GND	IN	Trigger GND
6	GND	IN	Power GND

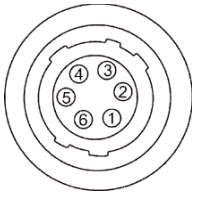

back Pannel

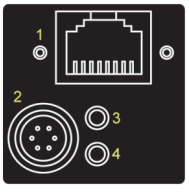

No.	Name	Remark
1	EtherNet Connector	Rj45
2	Power & I/O Connector	6Pin Circular
3,4	LED Indicator	LED

Dimension (Unit : mm)

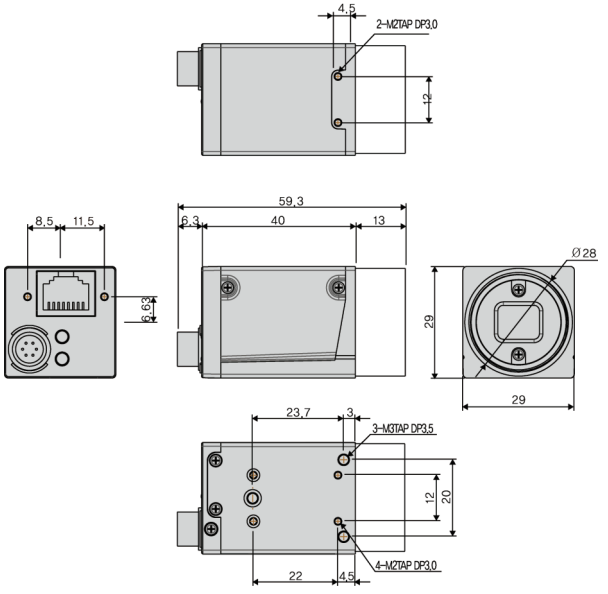

LED Indicator

LED1	Description	LED2	Description
OFF	Power off	OFF	Booting or Ready
RED	10/100 Link	RED	IP Assigning
Green	Gigabit Link	Green	Blink(Trigger exist) Grab enabled

Download (File name)

ex) SDK download:
CREVIS Site ▶ Search window ▶ File name

SDK : CVS Cam.zip

Subject to change without notice

Model		MG-A040M-280	MG-A040K-280
Sensor		Sony CMOS Pregius IMX287	
Sensor size		1/2.9"	
Pixel size (㎛)		6.9 x 6.9	
Resolution		728 x 544	
Frame Rate (Max.)		280fps	
Color / Mono		Mono Chrome	Color
Scanning method		Full / ROI / Reverse (X, Y, All)	
Synchronization		Internal (Freerun), External, Software trigger via PC	
Trigger modes		Fixed shutter, Pulse width shutter	
Shutter		Global	
Shutter speed		1us ~ 3sec (Exposure Offset : 별도)	
Gain		Analog : 0dB ~ 32dB (1x ~ 39.8x) Digital : 0dB ~ 24dB (1x ~ 16x)	
Black level		Analog : 0 ~ 4095 (12bit) Digital : 0 ~ 4095 (12bit)	
Gamma / LUT		Gamma Correction, Adjustable LUT (12bit to 12bit)	
Auto white balance		Off / Once / Continuous (Only Color Models)	
Auto gain / exposure		Off / Once / Continuous	
Interface		Ethernet 1000 Base-T (GigE Vision Standard)	
Pixel Data Format		Mono8/10/12, Mono10/12 Packed	Mono8/10/12, Mono10/12 Packed, Bayer8/10/12, Bayer10/12 Packed, YUV422 Packed
SNR		37dB	
Function control		GainAuto, ExposureAuto, BalanceWhiteAuto (Only Color Models), Acquisition Frame Rate (Adjustable), Line Debouncer, Color transformation Control, Noise Reduction Filter	
Lens mount		C mount	
Power requirements		12VDC ± 10%, PoE (Power over Ethernet 802.3af compliant)	
Consumption	DC	< 3.1W	
	PoE	< 3.6W	
Weight		< 60g	
Dimension (mm)		29 x 29 x 40 (without mount)	
Temperature		0℃ ~ 40℃ (Operating) / -10℃ ~ 50℃ (Storage)-(with < 20 ~ 80% RH)	
Vibration / Shock		98m/s^2 (10G) / 196m/s^2 (20.0G)	
Standard compliancy		CE (EN61326-1;2006년; Class A)	
Conformity		RoHS, WEEE, UL, FCC	
Warranty		3 years	

Model		MG-A160M-72	MG-A160K-72
Sensor		Sony CMOS Pregius IMX273	
Sensor size		1/2.9"	
Pixel size (㎛)		3.45 x 3.45	
Resolution		1456 x 1088	
Frame Rate (Max.)		72fps	
Color / Mono		Mono Chrome	Color
Scanning method		Full / ROI / Reverse (X,Y,All) / Decimation (Horizontal+Vertical) / Binning (Horizontal + Vertical) (Mono Model Only)	
Synchronization		Internal (Freerun), External, Software trigger via PC	
Trigger modes		Fixed shutter, Pulse width shutter	
Shutter		Global	
Shutter speed		1us ~ 3sec (Exposure Offset : 별도)	
Gain		Analog : 0dB ~ 32dB (1x ~ 39.8x) Digital : 0dB ~ 24dB (1x ~ 16x)	
Black level		Analog : 0 ~ 4095 (12bit) Digital : 0 ~ 4095 (12bit)	
Gamma / LUT		Gamma Correction, Adjustable LUT (12bit to 12bit)	
Auto white balance		Off / Once / Continuous (Only Color Models)	
Auto gain / exposure		Off / Once / Continuous	
Interface		Ethernet 1000 Base-T (GigE Vision Standard)	
Pixel Data Format		Mono8/10/12, Mono10/12 Packed	Mono8/10/12, Mono10/12 Packed, Bayer8/10/12, Bayer10/12 Packed, YUV422 Packed
SNR		36dB	
Function control		GainAuto, ExposureAuto, BalanceWhiteAuto (Only Color Models), Acquisition Frame Rate (Adjustable), Line Debouncer, Color transformation Control, Noise Reduction Filter	
Lens mount		C mount	
Power requirements		12VDC ± 10%, PoE (Power over Ethernet 802.3af compliant)	
Consumption	DC	< 3.1W	
	PoE	< 3.6W	
Weight		< 60g	
Dimension (mm)		29 x 29 x 40 (without mount)	
Temperature		0℃ ~ 40℃ (Operating) / -10℃ ~ 50℃ (Storage)-(with < 20 ~ 80% RH)	
Vibration / Shock		98m/s^2 (10G) / 196m/s^2 (20.0G)	
Standard compliancy		CE (EN61326-1;2006년; Class A)	
Conformity		RoHS, WEEE, UL, FCC	
Warranty		3 years	

Subject to change without notice

Model		MG-A320M-35	MG-A320K-35
Sensor		Sony CMOS Pregius IMX265	
Sensor size		1/1.8"	
Pixel size (㎛)		3.45 x 3.45	
Resolution		2064 x 1544	
Frame Rate (Max.)		35fps	
Color / Mono		Mono Chrome	Color
Scanning method		Full / ROI / Reverse (X,Y,All) / Decimation (Horizontal + Vertical)	
Synchronization		Internal (Freerun), External, Software trigger via PC	
Trigger modes		Fixed shutter, Pulse width shutter	
Shutter		Global	
Shutter speed		1us ~ 3sec (Exposure Offset : 별도)	
Gain		Analog : 0dB ~ 32dB (1x ~ 39.8x) Digital : 0dB ~ 24dB (1x ~ 16x)	
Black level		Analog : 0 ~ 4095 (12bit) Digital : 0 ~ 4095 (12bit)	
Gamma / LUT		Gamma Correction, Adjustable LUT (12bit to 12bit)	
Auto white balance		Off / Once / Continuous (Only Color Models)	
Auto gain / exposure		Off / Once / Continuous	
Interface		Ethernet 1000 Base-T (GigE Vision Standard)	
Pixel Data Format		Mono8/10/12, Mono10/12 Packed	Mono8/10/12, Mono10/12 Packed, Bayer8/10/12, Bayer10/12 Packed, YUV422 Packed
SNR		38dB	
Function control		GainAuto, ExposureAuto, BalanceWhiteAuto (Only Color Models), Acquisition Frame Rate (Adjustable), Line Debouncer, Color transformation Control, Noise Reduction Filter	
Lens mount		C mount	
Power requirements		12VDC ± 10%, PoE (Power over Ethernet 802.3af compliant)	
Consumption	DC	< 3W	
	PoE	< 3.5W	
Weight		< 60g	
Dimension (mm)		29 x 29 x 40 (without mount)	
Temperature		0℃ ~ 40℃ (Operating) / -10℃ ~ 50℃ (Storage)-(with < 20 ~ 80% RH)	
Vibration / Shock		98m/s^2 (10G) / 196m/s^2 (20.0G)	
Standard compliancy		CE (EN61326-1;2006년; Class A)	
Conformity		RoHS, WEEE, UL, FCC	
Warranty		3 years	

Model		MG-A500M-22	MG-A500K-22
Sensor		Sony CMOS Pregius IMX 264	
Sensor size		2/3"	
Pixel size (㎛)		3.45 x 3.45	
Resolution		2464 x 2056	
Frame Rate (Max.)		22fps	
Color / Mono		Mono Chrome	Color
Scanning method		Full / ROI / Reverse (X,Y,All) / Decimation (Horizontal + Vertical)	
Synchronization		Internal (Freerun), External, Software trigger via PC	
Trigger modes		Fixed shutter, Pulse width shutter	
Shutter		Global	
Shutter speed		1us ~ 3sec (Exposure Offset : 별도)	
Gain		Analog : 0dB ~ 32dB (1x ~ 39.8x) Digital : 0dB ~ 24dB (1x ~ 16x)	
Black level		Analog : 0 ~ 4095 (12bit) Digital : 0 ~ 4095 (12bit)	
Gamma / LUT		Gamma Correction, Adjustable LUT (12bit to 12bit)	
Auto white balance		Off / Once / Continuous (Only Color Models)	
Auto gain / exposure		Off / Once / Continuous	
Interface		Ethernet 1000 Base-T (GigE Vision Standard)	
Pixel Data Format		Mono8/10/12, Mono10/12 Packed	Mono8/10/12, Mono10/12 Packed, Bayer8/10/12, Bayer10/12 Packed, YUV422 Packed
SNR		36dB	
Function control		GainAuto, ExposureAuto, BalanceWhiteAuto (Only Color Models), Acquisition Frame Rate (Adjustable), Line Debouncer, Color transformation Control, Noise Reduction Filter	
Lens mount		C mount	
Power requirements		12VDC ± 10%, PoE (Power over Ethernet 802.3af compliant)	
Consumption	DC	< 3W	
	PoE	< 3.5W	
Weight		< 60g	
Dimension (mm)		29 x 29 x 40 (without mount)	
Temperature		0℃ ~ 40℃ (Operating) / -10℃ ~ 50℃ (Storage)-(with < 20 ~ 80% RH)	
Vibration / Shock		98m/s^2 (10G) / 196m/s^2 (20.0G)	
Standard compliancy		CE (EN61326-1;2006년; Class A)	
Conformity		RoHS, WEEE, UL, FCC	
Warranty		3 years	

Subject to change without notice

Model		MG-A121M-9	MG-A121K-9
Sensor		Sony CMOS Pregius IMX 304	
Sensor size		1.1"	
Pixel size (㎛)		3.45 x 3.45	
Resolution		4112 x 3008	
Frame Rate (Max.)		9fps	
Color / Mono		Mono Chrome	Color
Scanning method		Full / ROI / Reverse (X,Y,All) / Decimation (Horizontal + Vertical)	
Synchronization		Internal (Freerun), External, Software trigger via PC	
Trigger modes		Fixed shutter, Pulse width shutter	
Shutter		Global	
Shutter speed		1us ~ 3sec (Exposure Offset : 별도)	
Gain		Analog : 0dB ~ 32dB (1x ~ 39.8x) Digital : 0dB ~ 24dB (1x ~ 16x)	
Black level		Analog : 0 ~ 4095 (12bit) Digital : 0 ~ 4095 (12bit)	
Gamma / LUT		Gamma Correction, Adjustable LUT (12bit to 12bit)	
Auto white balance		Off / Once / Continuous (Only Color Models)	
Auto gain / exposure		Off / Once / Continuous	
Interface		Ethernet 1000 Base-T (GigE Vision Standard)	
Pixel Data Format		Mono8/10/12, Mono10/12 Packed	Mono8/10/12, Mono10/12 Packed, Bayer8/10/12, Bayer10/12 Packed, YUV422 Packed
SNR		42dB	36dB
Function control		GainAuto, ExposureAuto, BalanceWhiteAuto (Only Color Models), Acquisition Frame Rate (Adjustable), Line Debouncer, Color transformation Control, Noise Reduction Filter	
Lens mount		C mount	
Power requirements		12VDC ± 10%, PoE (Power over Ethernet 802.3af compliant)	
Consumption	DC	< 3.2W	
	PoE	< 3.7W	
Weight		< 60g	
Dimension (mm)		29 x 29 x 40 (without mount)	
Temperature		0℃ ~ 40℃ (Operating) / -10℃ ~ 50℃ (Storage)-(with < 20 ~ 80% RH)	
Vibration / Shock		98m/s^2 (10G) / 196m/s^2 (20.0G)	
Standard compliancy		CE (EN61326-1;2006년; Class A)	
Conformity		RoHS, WEEE, UL, FCC	
Warranty		3 years	

Model		MG-A600R-17	MG-A600L-17
Sensor		Sony CMOS Starvis IMX178	
Sensor size		1/1.8”	
Pixel size (㎛)		2.4 x 2.4	
Resolution		3088 x 2072	
Frame Rate (Max.)		17fps	
Color / Mono		Mono Chrome	Color
Scanning method		Full / ROI (Horizontal + Vertical) / Reverse (X,Y,All) / Binning	
Synchronization		Internal (Freerun), External, Software trigger via PC	
Trigger modes		Fixed shutter, Pulse width shutter	
Shutter		Rolling	
Shutter speed		243.5us ~ 3sec	
Gain		Analog : 0dB ~ 27dB (1x ~ 22.5x) Digital : 0dB ~ 24dB (1x ~ 16x)	
Black level		Analog : 0 ~ 255 (8bit) Digital : 0 ~ 4095 (12bit)	
Gamma / LUT		Gamma Correction (0 ~ 3.999)	
Auto white balance		Off / Once / Continuous	
Auto gain / exposure		Off / Once / Continuous	
Interface		Ethernet 1000 Base-T (GigE Vision Standard)	
Pixel Data Format		Mono8/10/12, Mono10/12 Packed	Mono8/10/12, Mono10/12Packed, Bayer8/10/12, Bayer10/12Packed, YUV422Packed
SNR		40dB	
Function control		GainAuto, ExposureAuto, BalanceWhiteAuto, Acquisition Frame Rate (Adjustable), Gamma Control, Line Debouncer, Color Transformation Control, Noise Reduction Filter, Pattern Noise Removal	
Lens mount		C mount	
Power requirements		12VDC ± 10%, PoE (Power over Ethernet 802.3af compliant)	
Consumption	DC	< 3W	
	PoE	< 3.5W	
Weight		< 60g	
Dimension (mm)		29 x 29 x 40 (without mount)	
Temperature		0℃ ~ 40℃ (Operating) / -10℃ ~ 50℃ (Storage)-(with < 20 ~ 80% RH)	
Vibration / Shock		98m/s^2 (10G) / 196m/s^2 (20.0G)	
Standard compliancy		CE (EN61326-1;2006년; Class A)	
Conformity		RoHS, WEEE, UL, FCC	
Warranty		3 years	

Subject to change without notice

Model		MG-A121R-9	MG-A121L-9
Sensor		Sony CMOS Starvis IMX226	
Sensor size		1/1.7"	
Pixel size (㎛)		1.85 x 1.85	
Resolution		4024 x 3036	
Frame Rate (Max.)		9fps	
Color / Mono		Mono Chrome	Color
Scanning method		Full / ROI / Reverse (X, Y, All)	
Synchronization		Internal (Freerun), External, Software trigger via PC	
Trigger modes		Fixed shutter, Pulse width shutter	
Shutter		Rolling, Global Reset	
Shutter speed		313.5μs ~ 3sec	
Gain		Analog : 0dB ~ 27dB (1x ~ 22.5x) Digital : 0dB ~ 24dB (1x ~ 16x)	
Black level		Analog : 0 ~ 255 (8bit) Digital : 0 ~ 4095 (12bit)	
Gamma / LUT		Gamma Correction, Adjustable LUT (12bit to 12bit)	
Auto white balance		Off / Once / Continuous (Only Color Models)	
Auto gain / exposure		Off / Once / Continuous	
Interface		Ethernet 1000 Base-T (GigE Vision Standard)	
Pixel Data Format		Mono8/10/12, Mono10/12 Packed	Mono8/10/12, Mono10/12 Packed, Bayer8/10/12, Bayer10/12 Packed, YUV422 Packed
SNR		40dB	
Function control		GainAuto, ExposureAuto, Acquisition Frame Rate (Adjustable), Color Transformation Control, Balance White Auto (Only Color Models)	
Lens mount		C mount	
Power requirements		12VDC ± 10%, PoE (Power over Ethernet 802.3af compliant)	
Consumption	DC	< 3W	
	PoE	< 3.5W	
Weight		< 60g	
Dimension (mm)		29 x 29 x 40 (without mount)	
Temperature		0℃ ~ 40℃ (Operating) / -10℃ ~ 50℃ (Storage)-(with < 20 ~ 80% RH)	
Vibration / Shock		98m/s^2 (10G) / 196m/s^2 (20.0G)	
Standard compliancy		CE (EN61326-1;2006년; Class A)	
Conformity		RoHS, WEEE, UL, FCC	
Warranty		3 years	

Model		MG-A201R-5	MG-A201L-5
Sensor		Sony CMOS Starvis IMX 183	
Sensor size		1"	
Pixel size (㎛)		2.4 x 2.4	
Resolution		5496 x 3672	
Frame Rate (Max.)		5fps	
Color / Mono		Mono Chrome	Color
Scanning method		Full / ROI / Reverse (X, Y, All)	
Synchronization		Internal (Freerun), External, Software trigger via PC	
Trigger modes		Fixed shutter, Pulse width shutter	
Shutter		Rolling, Global Reset	
Shutter speed		430 ㎲ ~ 3 sec	
Gain		Analog : 0dB ~ 27dB (1x ~ 22.5x) Digital : 0dB ~ 24dB (1x ~ 16x)	
Black level		Analog : 0 ~ 255 (8bit) Digital : 0 ~ 4095 (12bit)	
Gamma / LUT		Gamma Correction, Adjustable LUT (10bit to 10bit)	
Auto white balance		Off / Once / Continuous (Only Color Models)	
Auto gain / exposure		Off / Once / Continuous	
Interface		Ethernet 1000 Base-T (GigE Vision Standard)	
Pixel Data Format		Mono8/10, Mono10 Packed	Mono8/10, Mono10 Packed, Bayer8/10 Bayer10 Packed, YUV422 Packed
SNR		39dB	
Function control		GainAuto, ExposureAuto, BalanceWhiteAuto Acquisition Frame Rate (Adjustable), Line Debouncer Color Transformation Control, Noise Reduction Filter	
Lens mount		C mount	
Power requirements		12VDC ± 10%, PoE (Power over Ethernet 802.3af compliant)	
Consumption	DC	< 3.2W	
	PoE	< 3.7W	
Weight		< 60g	
Dimension (mm)		29 x 29 x 40 (without mount)	
Temperature		0℃ ~ 40℃ (Operating) / -10℃ ~ 50℃ (Storage)-(with < 20 ~ 80% RH)	
Vibration / Shock		98m/s² (10G) / 196m/s² (20.0G)	
Standard compliancy		CE (EN61326-1;2006년; Class A)	
Conformity		RoHS, WEEE, UL, FCC	
Warranty		3 years	

Subject to change without notice

Model		MG-A500M-FL	MG-A500K-FL
Sensor		Sony CMOS Pregius S IMX547	
Sensor size		1/1.8"	
Pixel size (㎛)		2.74 x 2.74	
Resolution		2472 x 2064	
Frame Rate (Max.)		22fps	
Color / Mono		Mono Chrome	Color
Scanning method		Full / ROI / Reverse (X,Y,All) / Decimation (Horizontal + Vertical) / Binning (Horizontal + Vertical) (Mono Model Only)	
Synchronization		Internal (Freerun), External, Software trigger via PC	
Trigger modes		Fixed shutter, Pulse width shutter	
Shutter		Global	
Shutter Speed		1us ~ 3sec (Exposure Offset : 별도)	
Gain		Analog : 0dB ~ 24 dB (1x ~ 15.8x) Digital : 0dB ~ 24 dB (1x ~ 16x)	
Black level		Analog : 0 ~ 4095 (12bit) / Digital : 0 ~ 4095 (12bit)	
Gamma / LUT		Gamma Correction (0 ~ 3.999), Adjustable LUT (12bit to 12bit)	
Auto white balance		Off / Once / Continuous (Color Model Only)	
Auto gain / exposure		Off / Once / Continuous	
Interface		Ethernet 1000 Base-T (GigE Vision Standard)	
Pixel Data Format		Mono8/10/12, Mono10/12Packed	Mono8/10/12, Mono10/12Packed, BayerRG8/10/12, BayerRG10/12Packed,YUV422Packed
SNR		38dB	39dB
Function control		GainAuto, ExposureAuto, BalanceWhiteAuto(Only Color Models) Acquisition Frame Rate(Adjustable), Line Debouncer Color Transformation Control, Noise Reduction Filter	
Lens mount		C mount	
Power requirements		12VDC ± 10%, PoE (Power over Ethernet 802.3af compliant)	
Consumption	DC	< 3.1W	
	PoE	< 3.6W	
Weight		< 65g	
Dimension (mm)		29 x 29 x 40 (without mount)	
Temperature		0℃ ~ 50℃ (Operating) / -10℃ ~ 50℃ (Storage)-(with < 20 ~ 80% RH)	
Vibration / Shock		98m/s^2 (10G) / 196m/s^2 (20.0G)	
Standard compliancy		CE (EN61326-1;2006년; Class A)	
Conformity		RoHS, WEEE, UL, FCC	
Warranty		3 years	

Model		MG-A121M-FL	MG-A121K-FL
Sensor		Sony CMOS Pregius S IMX545	
Sensor size		1/1.1"	
Pixel size (㎛)		2.74 x 2.74	
Resolution		4128 x 3008	
Frame Rate (Max.)		9fps	
Color / Mono		Mono Chrome	Color
Scanning method		Full / ROI / Reverse (X,Y,All) / Decimation (Horizontal + Vertical) / Binning (Horizontal + Vertical) (Mono Model Only)	
Synchronization		Internal (Freerun), External, Software trigger via PC	
Trigger modes		Fixed shutter, Pulse width shutter	
Shutter		Global	
Shutter speed		1us ~ 3sec (Exposure Offset : 별도)	
Gain		Analog : 0dB ~ 24 dB (1x ~ 15.8x) Digital : 0dB ~ 24 dB (1x ~ 16x)	
Black level		Analog : 0 ~ 4095 (12bit) / Digital : 0 ~ 4095 (12bit)	
Gamma / LUT		Gamma Correction (0 ~ 3.999), Adjustable LUT (12bit to 12bit)	
Auto white balance		Off / Once / Continuous (Color Model Only)	
Auto gain / exposure		Off / Once / Continuous	
Interface		Ethernet 1000 Base-T (GigE Vision Standard)	
Pixel Data Format		Mono8/10/12, Mono10/12Packed	Mono8/10/12, Mono10/12Packed, BayerRG8/10/12, BayerRG10/12Packed,YUV422Packed
SNR		39dB	40dB
Function control		GainAuto, ExposureAuto, BalanceWhiteAuto(Only Color Models) Acquisition Frame Rate(Adjustable), Line Debouncer Color Transformation Control, Noise Reduction Filter	
Lens mount		C mount	
Power requirements		12VDC ± 10% or PoE	
Consumption	DC	< 3.3W	
	PoE	< 3.8W	
Weight		< 65g	
Dimension (mm)		29 x 29 x 40 (without mount)	
Temperature		0℃ ~ 50℃ (Operating) / -10℃ ~ 50℃ (Storage)-(with < 20 ~ 80% RH)	
Vibration / Shock		98m/s^2 (10G) / 196m/s^2 (20.0G)	
Standard compliancy		CE (EN61326-1;2006년; Class A)	
Conformity		RoHS, WEEE, UL, FCC	
Warranty		3 years	

Subject to change without notice

Model		MG-A161M-FL	MG-A161K-FL
Sensor		Sony CMOS Pregius S IMX542	
Sensor size		1.1"	
Pixel size (㎛)		2.74 x 2.74	
Resolution		5328 x 3040	
Frame Rate (Max.)		7fps	
Color / Mono		Mono Chrome	Color
Scanning method		Full / ROI / Reverse (X,Y,All) / Decimation (Horizontal + Vertical) / Binning (Horizontal + Vertical) (Mono Model Only)	
Synchronization		Internal (Freerun), External, Software trigger via PC	
Trigger modes		Fixed shutter, Pulse width shutter	
Shutter		Global	
Shutter Speed		1us ~ 3sec (Exposure Offset : 별도)	
Gain		Analog : 0dB ~ 24 dB (1x ~ 15.8x) Digital : 0dB ~ 24 dB (1x ~ 16x)	
Black level		Analog : 0 ~ 4095 (12bit) / Digital : 0 ~ 4095 (12bit)	
Gamma / LUT		Gamma Correction (0 ~ 3.999), Adjustable LUT (12bit to 12bit)	
Auto white balance		Off / Once / Continuous (Color Model Only)	
Auto gain / exposure		Off / Once / Continuous	
Interface		Ethernet 1000 Base-T (GigE Vision Standard)	
Pixel Data Format		Mono8/10/12, Mono10/12Packed	Mono8/10/12, Mono10/12Packed, BayerRG8/10/12, BayerRG10/12Packed,YUV422Packed
SNR		38dB	38dB
Function control		GainAuto, ExposureAuto, BalanceWhiteAuto(Only Color Models) Acquisition Frame Rate(Adjustable), Line Debouncer Color Transformation Control, Noise Reduction Filter	
Lens mount		C mount	
Power requirements		12VDC ± 10%, PoE	
Consumption	DC	< 3.6W	
	PoE	< 4.2W	
Weight		< 65g	
Dimension (mm)		29 x 29 x 40 (without mount)	
Temperature		0℃ ~ 50℃ (Operating) / -10℃ ~ 50℃ (Storage)-(with < 20 ~ 80% RH)	
Vibration / Shock		98m/s^2 (10G) / 196m/s^2 (20.0G)	
Standard compliancy		CE (EN61326-1;2006년; Class A)	
Conformity		RoHS, WEEE, UL, FCC	
Warranty		3 years	

Model		MG-A241M-FL	MG-A241K-FL
Sensor		Sony CMOS Pregius S IMX540	
Sensor size		1.2"	
Pixel size (㎛)		2.74 x 2.74	
Resolution		5328 x 4608	
Frame Rate (Max.)		4fps	
Color / Mono		Mono Chrome	Color
Scanning method		Full / ROI / Reverse (X,Y,All) / Decimation (Horizontal + Vertical) / Binning (Horizontal + Vertical) (Mono Model Only)	
Synchronization		Internal (Freerun), External, Software trigger via PC	
Trigger modes		Fixed shutter, Pulse width shutter	
Shutter		Global	
Shutter speed		1us ~ 3sec (Exposure Offset : 별도)	
Gain		Analog : 0dB ~ 24 dB (1x ~ 15.8x) Digital : 0dB ~ 24 dB (1x ~ 16x)	
Black level		Analog : 0 ~ 4095 (12bit) / Digital : 0 ~ 4095 (12bit)	
Gamma / LUT		Gamma Correction (0 ~ 3.999), Adjustable LUT (12bit to 12bit)	
Auto white balance		Off / Once / Continuous (Color Model Only)	
Auto gain / exposure		Off / Once / Continuous	
Interface		Ethernet 1000 Base-T (GigE Vision Standard)	
Pixel Data Format		Mono8/10/12, Mono10/12Packed	Mono8/10/12, Mono10/12Packed, BayerRG8/10/12, BayerRG10/12Packed,YUV422Packed
SNR		38dB	39dB
Function control		GainAuto, ExposureAuto, BalanceWhiteAuto(Only Color Models) Acquisition Frame Rate(Adjustable), Line Debouncer Color Transformation Control, Noise Reduction Filter	
Lens mount		C mount	
Power requirements		12VDC ± 10% or PoE	
Consumption	DC	< 3.8W	
	PoE	< 4.3W	
Weight		< 65g	
Dimension (mm)		29 x 29 x 40 (without mount)	
Temperature		0℃ ~ 50℃ (Operating) / -10℃ ~ 50℃ (Storage)-(with < 20 ~ 80% RH)	
Vibration / Shock		98m/s^2 (10G) / 196m/s^2 (20.0G)	
Standard compliancy		CE (EN61326-1;2006년; Class A)	
Conformity		RoHS, WEEE, UL, FCC	
Warranty		3 years	

Subject to change without notice

Cameralink Cameras (Base)



Pregius STARVIS



Key Features

Mini-size CMOS CameraLink camera
Standard cameralink interface
Trigger input range : +4.5V ~ +24V
Supporting PoCL

Pin map

Pin No.	Name	IN/OUT	Description
1	PWR	IN	10.8V~26.4V Input Range
2	GPIO1	IN/OUT	TTL Input / Output
3	GPIO2	IN/OUT	TTL Input / Output
4	IO_GND	IN	IO_GND
5	NC	-	-
6	GND	IN	Power GND

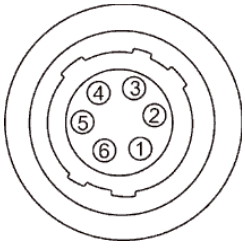

Dimension (Unit : mm)

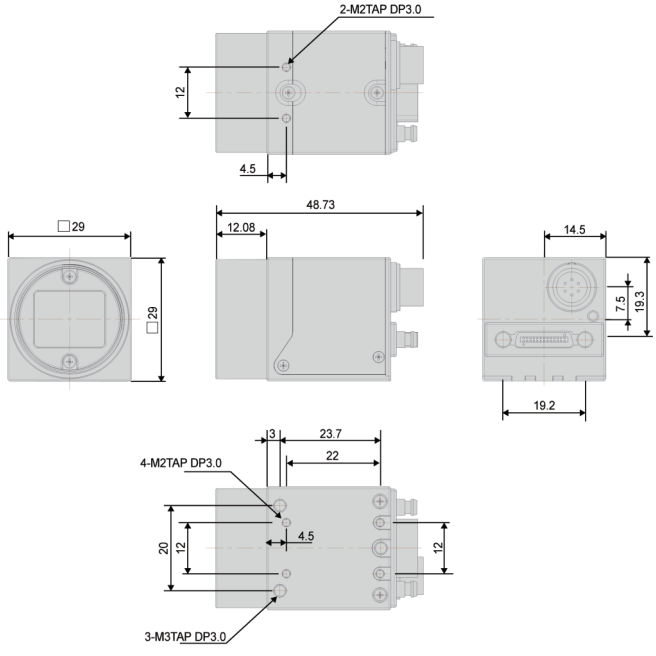

Download (File name)

ex) SDK download:
CREVIS Site ▶ Search window ▶ File name

CL-Installation Guide : cameralink_manual.zip
Camfile : cameralink_camfile.zip
CamguideCL : camguideCL.zip

Model		MC-A040M-523	MC-A040K-523
Sensor		Sony CMOS Pregius IMX 287	
Sensor size		1/2.9"	
Pixel size (㎛)		6.9 x 6.9	
Resolution		720 x 540	
Frame Rate (Max.)		523fps	
Color / Mono		Mono Chrome	Color
Scanning method		Full / ROI / Reverse (x, y, all)	
Synchronization		Internal (Freerun), External (CC1 or Circular), Software trigger via PC	
Trigger modes		Timed, Trigger width	
Shutter		Global	
Shutter speed		1us ~ 3sec (Exposure Offset : 별도)	
Gain		Analog : 0dB ~ 24dB (1x ~ 15.8x) Digital : 0dB ~ 18dB (1x ~ 8x)	
Black level		Analog : 0 ~ 255 (ADC 8bit) 0 ~ 1023 (ADC 10bit) 0 ~ 4095 (ADC 12bit) Digital : 0 ~ 1023 (10bit)	
Gamma / LUT		Gamma Correction, Adjustable LUT (10bit to 10bit)	
Auto white balance		Off / Once / Continuous (Only Color Models)	
Auto gain / exposure		Off / Once / Continuous	
Interface		Mini CameraLink™, PoCL	
Pixel data formats		Mono8/10	Mono8/10, Bayer8/10, RGB8
SNR		37dB	40 dB
Function control		GainAuto, ExposureAuto, BalanceWhiteAuto, Acquisition Frame Rate (Adjustable), Shading Correction (FFC), Noise Reduction Filter	
Lens mount		C mount	
Power requirements		DC 12V ~ 24V ± 10% or PoCL	
Consumption	DC	< 2.1W	
	PoCL		
Weight		< 44g	
Dimension (mm)		29 x 29 x 29 (without mount)	
Temperature		0℃ ~ 45℃ (Operating) / -20℃ ~ 60℃ (Storage)-(with < 20 ~ 80% RH)	
Vibration / Shock		98m/s^2 (10G) / 196m/s^2 (20.0G)	
Standard compliancy		CE (EN61326-1;2006년; Class A)	
Conformity		RoHS, WEEE, UL	
Warranty		3 years	

Subject to change without notice

Model		MC-A160M-154	MC-A160K-154
Sensor		Sony CMOS Pregius IMX 273	
Sensor size		1/2.9"	
Pixel size (㎛)		3.45 x 3.45	
Resolution		1440 x 1080	
Frame Rate (Max.)		154fps	
Color / Mono		Mono Chrome	Color
Scanning method		Full / ROI / Reverse (x, y, all) / Decimation (Horizontal + Vertical) / Binning (Only Mono models)	
Synchronization		Internal (Freerun), External (CC1 or Circular), Software trigger via PC	
Trigger modes		Timed, Trigger width	
Shutter		Global	
Shutter speed		1us ~ 3sec (Exposure Offset : 별도)	
Gain		Analog : 0dB ~ 24dB (1x ~ 15.8x) Digital : 0dB ~ 18dB (1x ~ 8x)	
Black level		Analog : 0 ~ 255 (ADC 8bit) 0 ~ 1023 (ADC 10bit) 0 ~ 4095 (ADC 12bit) Digital : 0 ~ 1023 (10bit)	
Gamma / LUT		Gamma Correction, Adjustable LUT (10bit to 10bit)	
Auto white balance		Off / Once / Continuous (Only Color Models)	
Auto gain / exposure		Off / Once / Continuous	
Interface		Mini CameraLink™, PoCL	
Pixel Data Format		Mono8/10	Mono8/10, Bayer8/10, RGB8
SNR		31dB	35dB
Function control		GainAuto, ExposureAuto, BalanceWhiteAuto, Acquisition Frame Rate (Adjustable), Shading Correction (FFC), Noise Reduction Filter	
Lens mount		C mount	
Power requirements		DC 12V ~ 24V ± 10% or PoCL	
Consumption	DC	< 2.1W	
	PoCL		
Weight		< 44g	
Dimension (mm)		29 x 29 x 29 (without mount)	
Temperature		0℃ ~ 45℃ (Operating) / -20℃ ~ 60℃ (Storage)-(with < 20 ~ 80% RH)	
Vibration / Shock		98m/s^2 (10G) / 196m/s^2 (20.0G)	
Standard compliancy		CE (EN61326-1;2006년; Class A)	
Conformity		RoHS, WEEE, UL	
Warranty		3 years	

Model		MC-A320M-55	MC-A320K-55
Image sensor		Sony CMOS Pregius IMX 265	
Sensor size		1/1.8"	
Pixel size (㎛)		3.45 x 3.45	
Resolution		2048 x 1536 / 3Tap : 2040 x 1536	
Frame Rate (Max.)		55fps	
Color / Mono		Mono Chrome	Color
Scanning method		Full / ROI / Reverse (x, y, all) / Decimation (Horizontal + Vertical)	
Synchronization		Internal (Freerun), External (CC1 or Circular), Software trigger via PC	
Trigger modes		Timed, Trigger width	
Shutter		Global	
Shutter speed		1us ~ 3sec (Exposure Offset : 별도)	
Gain		Analog : 0dB ~ 24dB (1x ~ 15.8x) Digital : 0dB ~ 18dB (1x ~ 8x)	
Black level		Analog : 0 ~ 4095 (12bit) Digital : 0 ~ 1023 (10bit)	
Gamma / LUT		Gamma Correction, Adjustable LUT (10bit to 10bit)	
Auto white balance		Off / Once / Continuous (Only Color Models)	
Auto gain / exposure		Off / Once / Continuous	
Interface		Mini CameraLink™, PoCL	
Pixel Data Format		Mono8/10	Mono8/10, Bayer8/10, RGB8
SNR		36dB	40dB
Function control		GainAuto, ExposureAuto, BalanceWhiteAuto, Acquisition Frame Rate (Adjustable), Shading Correction (FFC), Noise Reduction Filter	
Lens mount		C mount	
Power requirements		DC 12V ~ 24V ± 10% or PoCL	
Consumption	DC	< 2.1W	
	PoCL		
Weight		< 44g	
Dimension (mm)		29 x 29 x 29 (without mount)	
Temperature		0℃ ~ 45℃ (Operating) / -20℃ ~ 60℃ (Storage)-(with < 20 ~ 80% RH)	
Vibration / Shock		98m/s^2 (10G) / 196m/s^2 (20.0G)	
Standard compliancy		CE (EN61326-1;2006년; Class A)	
Conformity		RoHS, WEEE, UL	
Warranty		3 years	

Subject to change without notice

Model		MC-A500M-35	MC-A500K-35
Sensor		Sony CMOS Pregius IMX 264	
Sensor size		2/3"	
Pixel size (㎛)		3.45 x 3.45	
Resolution		2448 x 2048	
Frame Rate (Max.)		35fps	
Color / Mono		Mono Chrome	Color
Scanning method		Full / ROI / Reverse (x, y, all) / Decimation (Horizontal + Vertical)	
Synchronization		Internal (Freerun), External (CC1 or Circular), Software trigger via PC	
Trigger modes		Timed, Trigger width	
Shutter		Global	
Shutter speed		1us ~ 3sec (Exposure Offset : 별도)	
Gain		Analog : 0dB ~ 24dB (1x ~ 15.8x) Digital : 0dB ~ 18dB (1x ~ 8x)	
Black level		Analog : 0 ~ 4095 (12bit) Digital : 0 ~ 1023 (10bit)	
Gamma / LUT		Gamma Correction, Adjustable LUT (10bit to 10bit)	
Auto white balance		Off / Once / Continuous (Only Color Models)	
Auto gain / exposure		Off / Once / Continuous	
Interface		Mini CameraLink™, PoCL	
Pixel Data Format		Mono8/10	Mono8/10, Bayer8/10, RGB8
SNR		37dB	41dB
Function control		GainAuto, ExposureAuto, BalanceWhiteAuto, Acquisition Frame Rate (Adjustable), Shading Correction (FFC), Noise Reduction Filter	
Lens mount		C mount	
Power requirements		DC 12V ~ 24V ± 10% or PoCL	
Consumption	DC	< 2.1W	
	PoCL		
Weight		< 44g	
Dimension (mm)		29 x 29 x 29 (without mount)	
Temperature		0℃ ~ 45℃ (Operating) / -20℃ ~ 60℃ (Storage)-(with < 20 ~ 80% RH)	
Vibration / Shock		98m/s^2 (10G) / 196m/s^2 (20.0G)	
Standard compliancy		CE (EN61326-1;2006년; Class A)	
Conformity		RoHS, WEEE, UL	
Warranty		3 years	

Model		MC-A121M-20	MC-A121K-20
Image sensor		Sony CMOS Pregius IMX 304	
Sensor size		1.1"	
Pixel size (㎛)		3.45 x 3.45	
Resolution		4096 x 3000 / 3Tap : 4080 x 3000	
Frame Rate (Max.)		20fps	
Color / Mono		Mono Chrome	Color
Scanning method		Full / ROI / Reverse (x, y, all) / Decimation (Horizontal + Vertical)	
Synchronization		Internal (Freerun), External (CC1 or Circular), Software trigger via PC	
Trigger modes		Timed, Trigger width	
Shutter		Global	
Shutter speed		1us ~ 3sec (Exposure Offset : 별도)	
Gain		Analog : 0dB ~ 24dB (1x ~ 15.8x) Digital : 0dB ~ 18dB (1x ~ 8x)	
Black level		Analog : 0 ~ 4095 (12bit) Digital : 0 ~ 1023 (10bit)	
Gamma / LUT		Gamma Correction, Adjustable LUT (10bit to 10bit)	
Auto white balance		Off / Once / Continuous (Only Color Models)	
Auto gain / exposure		Off / Once / Continuous	
Interface		Mini CameraLink™, PoCL	
Pixel Data Format		Mono8/10	Mono8/10, Bayer8/10, RGB8
SNR		39dB	40dB
Function control		GainAuto, ExposureAuto, BalanceWhiteAuto, Acquisition Frame Rate (Adjustable), Shading Correction (FFC), Noise Reduction Filter	
Lens mount		C mount	
Power requirements		DC 12V ~ 24V ± 10% or PoCL	
Consumption	DC	< 2.3W	
	PoCL		
Weight		< 44g	
Dimension (mm)		29 x 29 x 29 (without mount)	
Temperature		0℃ ~ 45℃ (Operating) / -20℃ ~ 60℃ (Storage)-(with < 20 ~ 80% RH)	
Vibration / Shock		98m/s^2 (10G) / 196m/s^2 (20.0G)	
Standard compliancy		CE (EN61326-1;2006년; Class A)	
Conformity		RoHS, WEEE, UL	
Warranty		3 years	

Subject to change without notice

Model		MC-A121R-20	MC-A121L-20
Image sensor		Sony CMOS Starvis IMX 226	
Sensor size		1/1.7"	
Pixel size (㎛)		1.85 x 1.85	
Resolution		4016 x 3036 / 3Tap : 4008 x 3036	
Frame Rate (Max.)		20fps	
Color / Mono		Mono Chrome	Color
Scanning method		Full / ROI / Reverse (x, y, all)	
Synchronization		Internal (Freerun), External (CC1 or Circular), Software trigger via PC	
Trigger modes		Timed, Trigger width	
Shutter		Rolling, Global Reset	
Shutter speed		213.13us ~ 3sec	
Gain		Analog : 0dB ~ 28dB Digital : 0dB ~ 18dB	
Black level		Analog : 0 ~ 255 (10bit) Digital : 0 ~ 1023 (10bit)	
Gamma / LUT		Gamma Correction, Adjustable LUT (10bit to 10bit)	
Auto white balance		Off / Once / Continuous (Only Color Models)	
Auto gain / exposure		Off / Once / Continuous	
Interface		Mini CameraLink™, PoCL	
Pixel Data Format		Mono8/10	Mono8/10, Bayer8/10, RGB8
SNR		38dB	41dB
Function control		GainAuto, ExposureAuto, BalanceWhiteAuto, Acquisition Frame Rate (Adjustable), Shading Correction (FFC), Noise Reduction Filter	
Lens mount		C mount	
Power requirements		DC 12V ~ 24V ± 10% or PoCL	
Consumption	DC	< 1.9W	
	PoCL		
Weight		< 44g	
Dimension (mm)		29 x 29 x 29 (without mount)	
Temperature		0℃ ~ 45℃ (Operating) / -20℃ ~ 60℃ (Storage)-(with < 20 ~ 80% RH)	
Vibration / Shock		98m/s^2 (10G) / 196m/s^2 (20.0G)	
Standard compliancy		CE (EN61326-1:2006년; Class A)	
Conformity		RoHS, WEEE, UL	
Warranty		3 years	

Cameralink Cameras (Full)

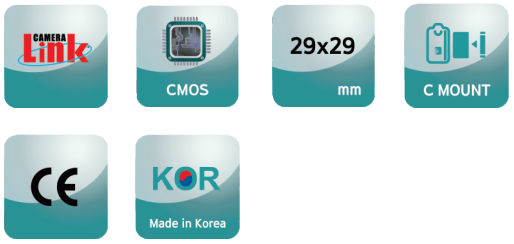

Pregius



Key Features

Mini-size CMOS CameraLink camera
Standard cameralink interface
Supporting PoCL

Pin map

Pin No.	Name	IN/OUT	Description
1	PWR	IN	10.8V~26.4V Input Range
2	GPIO1	IN/OUT	TTL Input / Output
3	GPIO2	IN/OUT	TTL Input / Output
4	GND	IN	Power GND

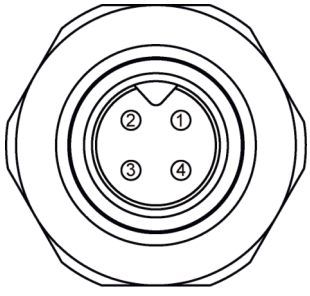

Dimension (Unit : mm)

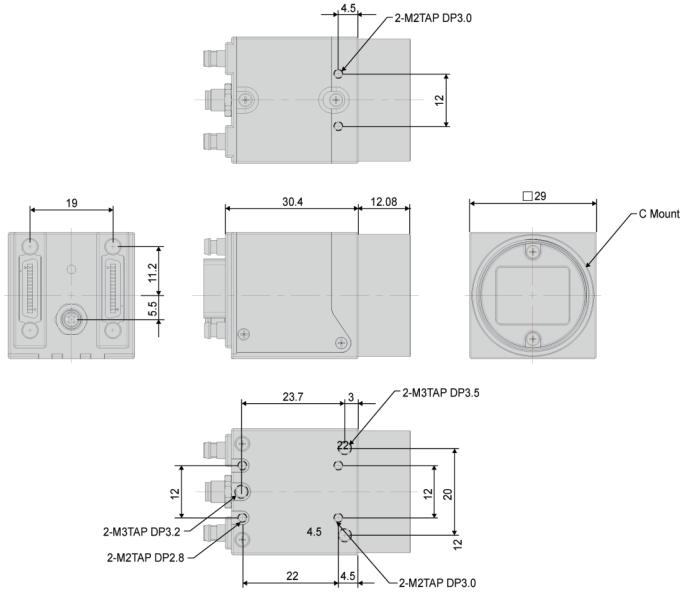

Download (File name)

ex) SDK download:
CREVIS Site ▶ Search window ▶ File name

CL-Installation Guide : cameralink_manual.zip
Camfile : cameralink_camfile.zip
CamguideCL : camguideCL.zip

Subject to change without notice

Model		MC-A500M-163	MC-A500K-163
Image sensor		Sony CMOS Pregius IMX 250	
Sensor size		2/3"	
Pixel size (㎛)		3.45 x 3.45	
Resolution		2464 x 2056 / 10Tap : 2440 x 2056	
Frame Rate (Max.)		163fps	
Color / Mono		Mono Chrome	Color
Scanning method		Full / ROI / Reverse (x, y, all) / Decimation (Horizontal + Vertical) / Binning (Vertical) Binning (Only Mono models)	
Synchronization		Internal (Freerun), External (CC1 ~ CC4), Software trigger via PC	
Trigger modes		Timed, Trigger width	
Shutter		Global	
Shutter speed		1us ~ 3sec (Exposure Offset : 별도)	
Gain		Analog : 0dB ~ 24dB (1x ~ 15.8x) Digital : 0dB ~ 18dB (1x ~ 8x)	
Black level		Analog : 0 ~ 1023 (10bit) Digital : 0 ~ 1023 (10bit)	
Gamma / LUT		Gamma Correction, Adjustable LUT (10bit to 10bit)	
Auto white balance		Off / Once / Continuous (Only Color Models)	
Auto gain / exposure		Off / Once / Continuous	
Interface		Mini CameraLink™, PoCL	
Pixel Data Format		Mono8/10	Mono8/10, Bayer8/10
SNR		39dB	40dB
Function control		GainAuto, ExposureAuto, BalanceWhiteAuto, Acquisition Frame Rate (Adjustable), Shading Correction (FFC), Noise Reduction Filter	
Lens mount		C mount	
Power requirements		DC 12V ~ 24V ± 10% or PoCL	
Consumption	DC	< 2.2W	
	PoCL		
Weight		< 47g	
Dimension (mm)		29 x 29 x 29 (without mount)	
Temperature		0℃ ~ 45℃ (Operating) / -20℃ ~ 60℃ (Storage)- (with < 20 ~ 80% RH)	
Vibration / Shock		98m/s^2 (10G) / 196m/s^2 (20.0G)	
Standard compliancy		CE (EN61326-1;2006년; Class A)	
Conformity		RoHS, WEEE, UL	
Warranty		3 years	

Model	MC-A121M-67	MC-A121K-67
Image sensor	Sony CMOS Pregius IMX 253	
Sensor size	1.1"	
Pixel size (㎛)	3.45 x 3.45	
Resolution	4096 x 3000 / 10Tap : 4080 x 3000	
Frame Rate (Max.)	67fps	
Color / Mono	Mono Chrome	Color
Scanning method	Full / ROI / Reverse (X,Y,All) / Decimation (Horizontal + Vertical) / Binning Vertical, Binning Horizontal Vertical (Only Mono Models)	
Synchronization	Internal (Freerun), External (CC1 ~ CC4), Software trigger via PC	
Trigger modes	Timed, Trigger width	
Shutter	Global	
Shutter speed	1us ~ 3sec (Exposure Offset : 별도)	
Gain	Analog : 0dB ~ 24dB (1x ~ 15.8x) Digital : 0dB ~ 18dB (1x ~ 8x)	
Black level	Analog : 0 ~ 1023 (10bit) Digital : 0 ~ 1023 (10bit)	
Gamma / LUT	Gamma Correction, Adjustable LUT (10bit to 10bit)	
Auto white balance	Off / Once / Continuous (Only Color Models)	
Auto gain / exposure	Off / Once / Continuous	
Interface	Mini CameraLink™, PoCL	
Pixel Data Format	Mono8/10	Mono8/10, Bayer8/10
SNR	38dB	42dB
Function control	GainAuto, ExposureAuto, BalanceWhiteAuto, Acquisition Frame Rate (Adjustable), Shading Correction (FFC), Noise Reduction Filter	
Lens mount	C mount	
Power requirements	DC 12V ~ 24V ± 10% or PoCL	
Consumption DC	< 2.6W	
Consumption PoCL	< 2.6W	
Weight	< 47g	
Dimension (mm)	29 x 29 x 29 (without mount)	
Temperature	0℃ ~ 45℃ (Operating) / -20℃ ~ 60℃ (Storage)-(with < 20 ~ 80% RH)	
Vibration / Shock	98m/s^2 (10G) / 196m/s^2 (20.0G)	
Standard compliancy	CE (EN61326-1;2006년; Class A)	
Conformity	RoHS, WEEE, UL	
Warranty	3 years	

Subject to change without notice

Cameralink Cameras

25Mega Pixel

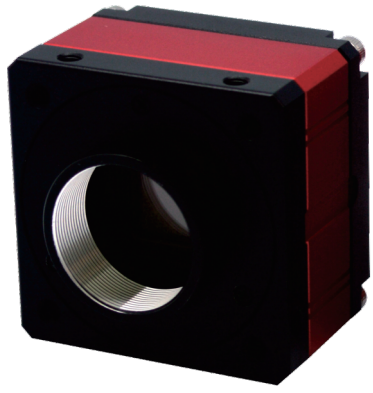

Key Features

High resolution CMOS Cameralink Camera
Higher frame rates with AOI
Standard cameralink interface
Trigger input range : +2.7V~3.3V(TTL), +3.3V~24V(Photo coupler)

Pin map

6pin Connector

Pin No.	Name	IN/OUT	Description
1	PWR	IN	10.8V~26.4V Input Range
2	GPIO1	IN/OUT	Line5
3	GPIO2	IN/OUT	Line6
4	GND	IN	I/O GND
5	NC	-	-
6	GND	IN	Power GND

Dimension (Unit : mm)

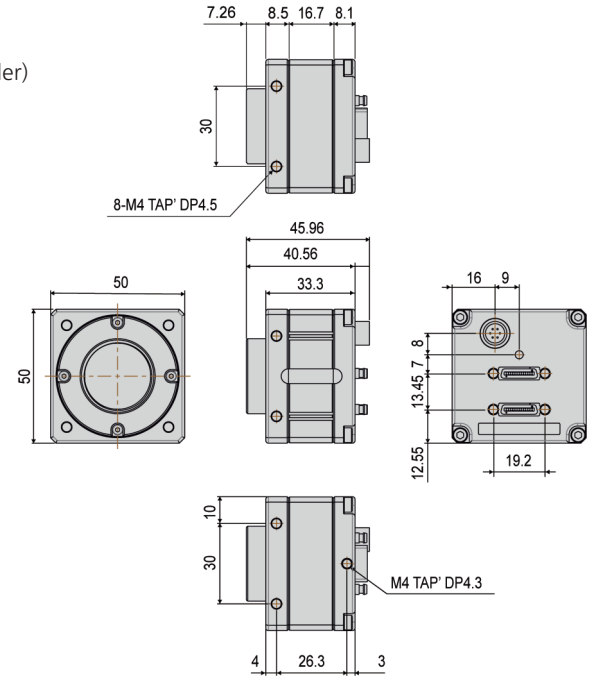

Download (File name)

ex) SDK download:
CREVIS Site ▶ Search window ▶ File name

CL-Installation Guide : cameralink_manual.zip
Camfile : cameralink_camfile.zip
CamguideCL : camguideCL.zip

Model	HC-F251M-31	HC-F251K-31
Sensor	GMAX0505 25M	
Sensor size	1.1"	
Pixel size (㎛)	2.5 x 2.5	
Resolution	5120 x 5120	
CameraLink Pixel Freq.	2, 3, 4, 8, 10Tap : 85MHz	
Frame Rate (Max.)	31.7fps	
Color / Mono	Mono Chrome	Color
Scanning method	Full / Single ROI / Multi ROI / Reverse (X,Y,All) / Decimation Vertical	
Synchronization	Internal (Freerun), External (CC1 ~ CC4 or Circular), Software trigger via PC	
Trigger modes	Fixed shutter, Pulse width shutter	
Shutter	Global Shutter	
Shutter speed	1us ~ 3sec (ExposureOffset : 별도)	
Gain	Digital : 0dB ~ 12dB (1x ~ 4x)	
Black level	Analog : 0 ~ 2047 / Digital : 0 ~ 1023 (10bit)	
Gamma / LUT	Gamma Correction (0 ~ 3.999) / Adjustable LUT (10bit to 10bit)	
Interface	CameraLink x 2 (PoCL support)	
Pixel data formats	Mono8	Bayer8
SNR	37dB	
Function control	GainAuto, ExposureAuto, Acquisition Frame Rate (Adjustable), DefectPixelCorrection, Shading Correction (FFC, Under 8tap)	
Lens mount	C mount	
Power requirements	DC (12V ~ 24V ± 10%) or PoCL	
Consumption	< 6.0W	
Weight	142g	
Dimension (mm)	50 x 50 x 33.3 (Without Mount, Connector)	
Temperature	0℃ ~ + 40℃ / -5℃ ~ + 45℃ (with < 20 ~ 80% RH)	
Vibration / Shock	98m/s^2 (10G) / 196m/s^2 (20.0G)	
Standard compliancy	CE (EN61326-1; 2013; Class A)	
Conformity	RoHS, WEEE, UL	
Warranty	3 years	

Subject to change without notice

CoaXPress Cameras



Pregius **STARVIS**



Key Features

Mini-size CMOS CoaXpress camera
Camera standard
- GenICam, CoaXpress
Trigger input range : +4.5V~24V(Photo coupler)
Supporting PoCXP

Dimension (Unit : mm)

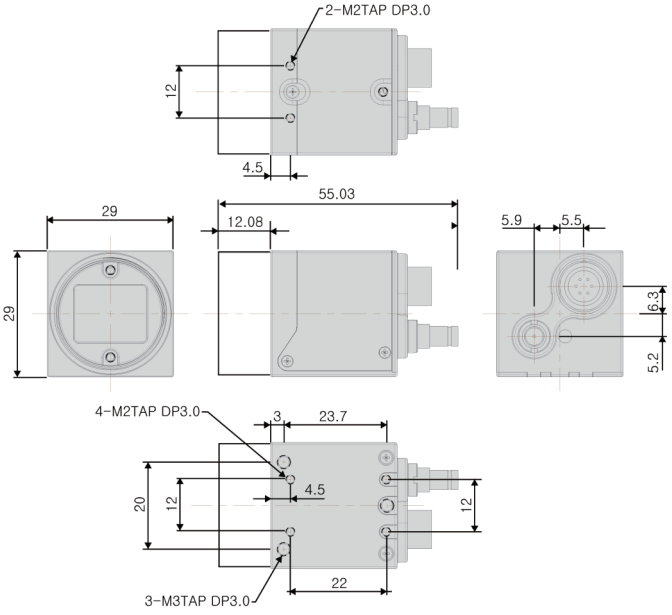

Pin map

Pin No.	Name	IN/OUT	Description
1	PWR	IN	10.8V~26.4V Input Range
2	Trigger	IN	Opto-Isolated Input, Trigger input
3	GND	OUT	Strobe GND
4	Strobe	OUT	Opto-Isolated output, Strobe output
5	GND	IN	Trigger GND
6	GND	IN	Power GND

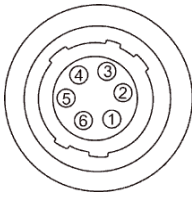

LED Indicator

State	Indication
No power	Off
System booting	Solid orange
Powered, but nothing connected	Slow pulse red
no data being transffered	Solid green
Waiting for event	Slow pulse orange
Data being transferred	Fast flash green

back Pannel



No.	Name	Remark
1	CoaXpress Connector	DIN
2	Power & I/O Connector	6Pin Circular
3	LED Indicator	LED

Model		MX-A040M-523	MX-A040K-523
Sensor		Sony CMOS Pregius IMX287	
Sensor size		1/2.9"	
Pixel size (㎛)		6.9 x 6.9	
Resolution		720 x 540	
Frame Rate (Max.)		523fps	
Color / Mono		Mono Chrome	Color
Scanning method		Full / ROI (Horizontal + Vertical) / Reverse (X,Y,All)	
Synchronization		Internal (Freerun), External (CXP or Circular), Software trigger via PC	
Trigger modes		Fixed shutter, Pulse width shutter	
Shutter		Global	
Shutter speed		1us ~ 3sec (Exposure Offset 별도)	
Gain		Analog : 0dB ~ 24dB (1x ~ 15.8x) Digital : 0dB ~ 18dB (1x ~ 8x)	
Black level		Analog : 0 ~ 1023 (10bit) / Digital : 0 ~ 1023 (10bit)	
Gamma / LUT		Gamma Correction, Adjustable LUT (10bit to 10bit)	
Auto white balance		Off / Once / Continuous (Only Color Models)	
Auto gain / exposure		Off / Once / Continuous	
Interface		CoaXpress	
Pixel Data Format		Mono8/10	Mono8/10, Bayer8/10
SNR		33dB	36dB
Function control		GainAuto, ExposureAuto, BalanceWhiteAuto, Acquisition Frame Rate (Adjustable), Shading Correction(FFC), Noise Reduction Filter	
Lens mount		C mount	
Power requirements		DC 12V ~ 24V ± 10% or PoCXP	
Consumption	DC	< 2.5W	
	PoCXP		
Weight		< 49g	
Dimension (mm)		29 x 29 x 29 (without mount)	
Temperature		0℃ ~ 40℃ (Operating) / -5℃ ~ 45℃ (Storage)-(with < 20 ~ 80% RH)	
Vibration / Shock		98m/s^2 (10G) / 196m/s^2 (20.0G)	
Standard compliancy		CE (EN61326-1;2006년; Class A)	
Conformity		RoHS, WEEE, UL, FCC	
Warranty		3 years	

Subject to change without notice

Model		MX-A160M-276	MX-A160K-276
Sensor		Sony CMOS Pregius IMX273	
Sensor size		1/2.9"	
Pixel size (㎛)		3.45 x 3.45	
Resolution		1440 x 1080	
Frame Rate (Max.)		276fps	
Color / Mono		Mono Chrome	Color
Scanning method		Full / ROI / Decimation (Horizontal + Vertical) / Reverse (X, Y, All) / Binning (Only mono models)	
Synchronization		Internal (Freerun), External (CXP or Circular), Software trigger via PC	
Trigger modes		Fixed shutter, Pulse width shutter	
Shutter		Global	
Shutter speed		1us ~ 3sec (Exposure Offset 별도)	
Gain		Analog : 0dB ~ 24dB (1x ~ 15.8x) Digital : 0dB ~ 18dB (1x ~ 8x)	
Black level		Analog : 0 ~ 1023 (10bit) / Digital : 0 ~ 1023 (10bit)	
Gamma / LUT		Gamma Correction, Adjustable LUT (10bit to 10bit)	
Auto white balance		Off / Once / Continuous (Only Color Models)	
Auto gain / exposure		Off / Once / Continuous	
Interface		CoaXpress	
Pixel Data Format		Mono8/10	Mono8/10, Bayer8/10
SNR		34dB	35dB
Function control		GainAuto, ExposureAuto, BalanceWhiteAuto, Acquisition Frame Rate (Adjustable), Shading Correction (FFC), Noise Reduction Filter	
Lens mount		C mount	
Power requirements		DC 12V ~ 24V ± 10% or PoCXP	
Consumption	DC	< 2.6W	
	PoCXP		
Weight		< 49g	
Dimension (mm)		29 x 29 x 29 (without mount)	
Temperature		0℃ ~ 40℃ (Operating) / -5℃ ~ 45℃ (Storage)-(with < 20 ~ 80% RH)	
Vibration / Shock		98m/s^2 (10G) / 196m/s^2 (20.0G)	
Standard compliancy		CE (EN61326-1;2006년; Class A)	
Conformity		RoHS, WEEE, UL, FCC	
Warranty		3 years	

Model		MX-A320M-184	MX-A320K-184
Sensor		Sony CMOS Pregius IMX252	
Sensor size		1/1.8”	
Pixel size (㎛)		3.45 x 3.45	
Resolution		2064 x 1544	
Frame Rate (Max.)		184fps	
Color / Mono		Mono Chrome	Color
Scanning method		Full / ROI / Decimation (Horizontal + Vertical) / Reverse (X, Y, All) / Binning (Only mono models) / Binning (Vertical)	
Synchronization		Internal (Freerun), External (CXP or Circular), Software trigger via PC	
Trigger modes		Fixed shutter, Pulse width shutter	
Shutter		Global	
Shutter speed		1us ~ 3sec (Exposure Offset 별도)	
Gain		Analog : 0dB ~ 24dB (1x ~ 15.8x) Digital : 0dB ~ 18dB (1x ~ 8x)	
Black level		Analog : 0 ~ 1023 (10bit) / Digital : 0 ~ 1023 (10bit)	
Gamma / LUT		Gamma Correction, Adjustable LUT (10bit to 10bit)	
Auto white balance		Off / Once / Continuous (Only Color Models)	
Auto gain / exposure		Off / Once / Continuous	
Interface		CoaXpress	
Pixel Data Format		Mono8/10	Mono8/10, Bayer8/10
SNR		38dB	40dB
Function control		GainAuto, ExposureAuto, BalanceWhiteAuto, Acquisition Frame Rate (Adjustable), Shading Correction (FFC), Noise Reduction Filter	
Lens mount		C mount	
Power requirements		DC 12V ~ 24V ± 10% or PoCXP	
Consumption	DC	< 3.1W	
	PoCXP		
Weight		< 49g	
Dimension (mm)		29 x 29 x 29 (without mount)	
Temperature		0℃ ~ 40℃ (Operating) / -5℃ ~ 45℃ (Storage)-(with < 20 ~ 80% RH)	
Vibration / Shock		98m/s^2 (10G) / 196m/s^2 (20.0G)	
Standard compliancy		CE (EN61326-1;2006년; Class A)	
Conformity		RoHS, WEEE, UL, FCC	
Warranty		3 years	

Subject to change without notice

Model		MX-A500M-116	MX-A500K-116
Sensor		Sony CMOS Pregius IMX250	
Sensor size		2/3"	
Pixel size (㎛)		3.45 x 3.45	
Resolution		2464 x 2056	
Frame Rate (Max.)		116fps	
Color / Mono		Mono Chrome	Color
Scanning method		Full / ROI / Decimation (Horizontal + Vertical) / Reverse (X, Y, All) / Binning (Only mono models) / Binning (Vertical)	
Synchronization		Internal (Freerun), External (CXP or Circular), Software trigger via PC	
Trigger modes		Fixed shutter, Pulse width shutter	
Shutter		Global	
Shutter speed		1us ~ 3sec (Exposure Offset 별도)	
Gain		Analog : 0dB ~ 24dB (1x ~ 15.8x) Digital : 0dB ~ 18dB (1x ~ 8x)	
Black level		Analog : 0 ~ 1023 (10bit) / Digital : 0 ~ 1023 (10bit)	
Gamma / LUT		Gamma Correction, Adjustable LUT (10bit to 10bit)	
Auto white balance		Off / Once / Continuous (Only Color Models)	
Auto gain / exposure		Off / Once / Continuous	
Interface		CoaXpress	
Pixel Data Format		Mono8/10	Mono8/10, Bayer8/10
SNR		38dB	40dB
Function control		GainAuto, ExposureAuto, BalanceWhiteAuto, Acquisition Frame Rate (Adjustable), Shading Correction (FFC), Noise Reduction Filter	
Lens mount		C mount	
Power requirements		DC 12V ~ 24V ± 10% or PoCXP	
Consumption	DC	< 3.1W	
	PoCXP		
Weight		< 49g	
Dimension (mm)		29 x 29 x 29 (without mount)	
Temperature		0℃ ~ 40℃ (Operating) / -5℃ ~ 45℃ (Storage)-(with < 20 ~ 80% RH)	
Vibration / Shock		98m/s^2 (10G) / 196m/s^2 (20.0G)	
Standard compliancy		CE (EN61326-1;2006년; Class A)	
Conformity		RoHS, WEEE, UL, FCC	
Warranty		3 years	

Model		MX-A890M-66	MX-A890K-66
Sensor		Sony CMOS Pregius IMX255	
Sensor size		1”	
Pixel size (㎛)		3.45 x 3.45	
Resolution		4096 x 2176	
Frame Rate (Max.)		66fps	
Color / Mono		Mono Chrome	Color
Scanning method		Full / ROI / Decimation (Horizontal + Vertical) / Reverse (X, Y, All) / Binning (Only mono models)	
Synchronization		Internal (Freerun), External (CXP or Circular), Software trigger via PC	
Trigger modes		Fixed shutter, Pulse width shutter	
Shutter		Global	
Shutter speed		1us ~ 3sec (Exposure Offset 별도)	
Gain		Analog : 0dB ~ 24dB (1x ~ 15.8x) Digital : 0dB ~ 18dB (1x ~ 8x)	
Black level		Analog : 0 ~ 1023 (10bit) / Digital : 0 ~ 1023 (10bit)	
Gamma / LUT		Gamma Correction, Adjustable LUT (10bit to 10bit)	
Auto white balance		Off / Once / Continuous (Only Color Models)	
Auto gain / exposure		Off / Once / Continuous	
Interface		CoaXpress	
Pixel Data Format		Mono8/10	Mono8/10, Bayer8/10
SNR		38dB	41dB
Function control		GainAuto, ExposureAuto, BalanceWhiteAuto, Acquisition Frame Rate (Adjustable), Shading Correction (FFC), Noise Reduction Filter	
Lens mount		C mount	
Power requirements		DC 12V ~ 24V ± 10% or PoCXP	
Consumption	DC	< 3.5W	
	PoCXP		
Weight		< 49g	
Dimension (mm)		29 x 29 x 29 (without mount)	
Temperature		0℃ ~ 40℃ (Operating) / -5℃ ~ 45℃ (Storage)-(with < 20 ~ 80% RH)	
Vibration / Shock		98m/s^2 (10G) / 196m/s^2 (20.0G)	
Standard compliancy		CE (EN61326-1;2006년; Class A)	
Conformity		RoHS, WEEE, UL	
Warranty		3 years	

Subject to change without notice

Model		MX-A121M-23	MX-A121K-23
Sensor		Sony CMOS Pregius IMX304	
Sensor size		1.1”	
Pixel size (㎛)		3.45 x 3.45	
Resolution		4096 x 3000	
Frame Rate (Max.)		23fps	
Color / Mono		Mono Chrome	Color
Scanning method		Full / ROI / Decimation (Horizontal + Vertical) / Reverse (X, Y, All)	
Synchronization		Internal (Freerun), External (CXP or Circular), Software trigger via PC	
Trigger modes		Fixed shutter, Pulse width shutter	
Shutter		Global	
Shutter speed		1us ~ 3sec (Exposure Offset 별도)	
Gain		Analog : 0dB ~ 24dB (1x ~ 15.8x) Digital : 0dB ~ 18dB (1x ~ 8x)	
Black level		Analog : 0 ~ 1023 (10bit) / Digital : 0 ~ 1023 (10bit)	
Gamma / LUT		Gamma Correction, Adjustable LUT (10bit to 10bit)	
Auto white balance		Off / Once / Continuous (Only Color Models)	
Auto gain / exposure		Off / Once / Continuous	
Interface		CoaXpress	
Pixel Data Format		Mono8/10	Mono8/10, Bayer8/10
SNR		38dB	41dB
Function control		GainAuto, ExposureAuto, BalanceWhiteAuto, Acquisition Frame Rate (Adjustable), Shading Correction (FFC), Noise Reduction Filter	
Lens mount		C mount	
Power requirements		DC 12V ~ 24V ± 10% or PoCXP	
Consumption	DC	< 2.6W	
	PoCXP		
Weight		< 49g	
Dimension (mm)		29 x 29 x 29 (without mount)	
Temperature		0℃ ~ 40℃ (Operating) / -5℃ ~ 45℃ (Storage)-(with < 20 ~ 80% RH)	
Vibration / Shock		98m/s^2 (10G) / 196m/s^2 (20.0G)	
Standard compliancy		CE (EN61326-1;2006년; Class A)	
Conformity		RoHS, WEEE, UL, FCC	
Warranty		3 years	

Model		MX-A121M-48	MX-A121K-48
Sensor		Sony CMOS Pregius IMX253	
Sensor size		1.1”	
Pixel size (㎛)		3.45 x 3.45	
Resolution		4096 x 3000	
Frame Rate (Max.)		48fps	
Color / Mono		Mono Chrome	Color
Scanning method		Full / ROI / Decimation (Horizontal + Vertical) / Reverse (X, Y, All) / Binning (Only mono models)	
Synchronization		Internal (Freerun), External (CXP or Circular), Software trigger via PC	
Trigger modes		Fixed shutter, Pulse width shutter	
Shutter		Global	
Shutter speed		1us ~ 3sec (Exposure Offset 별도)	
Gain		Analog : 0dB ~ 24dB (1x ~ 15.8x) Digital : 0dB ~ 18dB (1x ~ 8x)	
Black level		Analog : 0 ~ 1023 (10bit) / Digital : 0 ~ 1023 (10bit)	
Gamma / LUT		Gamma Correction, Adjustable LUT (10bit to 10bit)	
Auto white balance		Off / Once / Continuous (Only Color Models)	
Auto gain / exposure		Off / Once / Continuous	
Interface		CoaXpress	
Pixel Data Format		Mono8/10	Mono8/10, Bayer8/10
SNR		38dB	40dB
Function control		GainAuto, ExposureAuto, BalanceWhiteAuto, Acquisition Frame Rate (Adjustable), Shading Correction (FFC), Noise Reduction Filter	
Lens mount		C mount	
Power requirements		DC 12V ~ 24V ± 10% or PoCXP	
Consumption	DC	< 3.5W	
	PoCXP		
Weight		< 49g	
Dimension (mm)		29 x 29 x 29 (without mount)	
Temperature		0℃ ~ 40℃ (Operating) / -5℃ ~ 45℃ (Storage)-(with < 20 ~ 80% RH)	
Vibration / Shock		98m/s^2 (10G) / 196m/s^2 (20.0G)	
Standard compliancy		CE (EN61326-1;2006년; Class A)	
Conformity		RoHS, WEEE, UL, FCC	
Warranty		3 years	

Subject to change without notice

Model		MX-A121R-43	MX-A121L-43
Sensor		Sony CMOS Starvis IMX226	
Sensor size		1/1.7”	
Pixel size (㎛)		1.85 x 1.85	
Resolution		4016 x 3036	
Frame Rate (Max.)		43fps	
Color / Mono		Mono Chrome	Color
Scanning method		Full / ROI / Reverse (X, Y, All)	
Synchronization		Internal (Freerun), External (CXP or Circular), Software trigger via PC	
Trigger modes		Fixed shutter, Pulse width shutter	
Shutter		Rolling / Global Reset	
Shutter speed		450.00us ~ 3sec	
Gain		Analog : 0dB ~ 27dB (1x ~ 22.5x) Digital : 0dB ~ 18dB (1x ~ 8x)	
Black level		Analog : 0 ~ 1023 (10bit) / Digital : 0 ~ 1023 (10bit)	
Gamma / LUT		Gamma Correction, Adjustable LUT (10bit to 10bit)	
Auto white balance		Off / Once / Continuous (Only Color Models)	
Auto gain / exposure		Off / Once / Continuous	
Interface		CoaXpress	
Pixel Data Format		Mono8/10	Mono8/10, Bayer8/10
SNR		39dB	44dB
Function control		GainAuto, ExposureAuto, BalanceWhiteAuto, Acquisition Frame Rate (Adjustable), Shading Correction (FFC), Noise Reduction Filter	
Lens mount		C mount	
Power requirements		DC 12V ~ 24V ± 10% or PoCXP	
Consumption	DC	< 2.6W	
	PoCXP		
Weight		< 49g	
Dimension (mm)		29 x 29 x 29 (without mount)	
Temperature		0℃ ~ 40℃ (Operating) / -5℃ ~ 45℃ (Storage)-(with < 20 ~ 80% RH)	
Vibration / Shock		98m/s^2 (10G) / 196m/s^2 (20.0G)	
Standard compliancy		CE (EN61326-1;2006년; Class A)	
Conformity		RoHS, WEEE, UL, FCC	
Warranty		3 years	

Model		MX-A201R-26	MX-A201L-26
Sensor		Sony CMOS Starvis IMX183	
Sensor size		1”	
Pixel size (㎛)		2.4 x 2.4	
Resolution		5488 x 3672	
Frame Rate (Max.)		26fps	
Color / Mono		Mono Chrome	Color
Scanning method		Full / ROI / Reverse (X, Y, All)	
Synchronization		Internal (Freerun), External (CXP or Circular), Software trigger via PC	
Trigger modes		Fixed shutter, Pulse width shutter	
Shutter		Rolling / Global Reset	
Shutter speed		806.00us ~ 3sec	
Gain		Analog : 0dB ~ 27dB (1x ~ 22.5x) Digital : 0dB ~ 18dB (1x ~ 8x)	
Black level		Analog : 0 ~ 1023 (10bit) / Digital : 0 ~ 1023 (10bit)	
Gamma / LUT		Gamma Correction, Adjustable LUT (10bit to 10bit)	
Auto white balance		Off / Once / Continuous (Only Color Models)	
Auto gain / exposure		Off / Once / Continuous	
Interface		CoaXpress	
Pixel Data Format		Mono8/10	Mono8/10, Bayer8/10
SNR		38dB	41dB
Function control		GainAuto, ExposureAuto, BalanceWhiteAuto, Acquisition Frame Rate (Adjustable), Shading Correction (FFC), Noise Reduction Filter	
Lens mount		C mount	
Power requirements		DC 12V ~ 24V ± 10% or PoCXP	
Consumption	DC	< 2.9W	
	PoCXP		
Weight		< 49g	
Dimension (mm)		29 x 29 x 29 (without mount)	
Temperature		0℃ ~ 40℃ (Operating) / -5℃ ~ 45℃ (Storage)-(with < 20 ~ 80% RH)	
Vibration / Shock		98m/s^2 (10G) / 196m/s^2 (20.0G)	
Standard compliancy		CE (EN61326-1;2006년; Class A)	
Conformity		RoHS, WEEE UL, FCC	
Warranty		3 years	

Subject to change without notice

CoaXPress 2.0 Cameras (2Ch)



Key Features

High resolution CMOS CoaXPress2.0 Camera
Supporting FFC
Supporting PoCXP
12.5Gbps x 2ch
Max Cable Length : 30meter @ CXP12

Back Pannel

Pin No.	Name	Description
1	CoaXPress Connector 1	MicroBNC Type
2	CoaXPress Connector 2	MicroBNC Type
3	LED Indicator 1	LED
4	LED Indicator 2	LED
5	I/O Connector	6 Pin Circular Connector

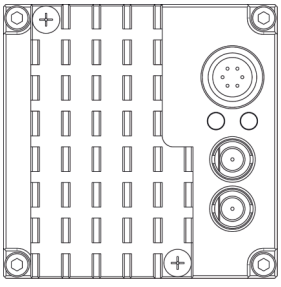

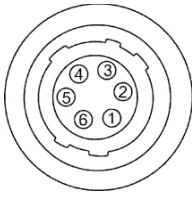

6 pin Circular Connector

Pin No.	Name	IN/OUT	Description
1	GPIO	IN/OUT	Line5, Direct I/O
2	GPI_ISO+	IN	Opto-Isolated input, Trigger input
3	GPO_ISO+	OUT	Opto-Isolated output, Strobe output
4	GPI_ISO-	IN	Trigger GND
5	GPO_ISO-	OUT	Strobe GND
6	GPIO GND	IN/OUT	

Dimension (Unit : mm)

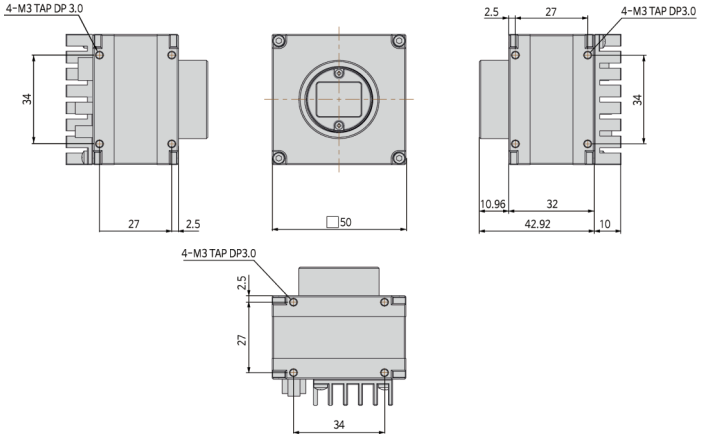

LED Indicator

State	Indication
No power	Off
System booting	Solid orange
Powered, but nothing connected	Slow pulse red
Connection detection in progress	Fast flash orange
Device - Host connected, but no data being transferred	Solid green
Device - Host connected, waiting for event (e.g. trigger)	Slow flash orange
Device - Host connected, data being transferred	Fast flash green

Model	HX-A241M-94
Sensor	CSony CMOS Pregius S IMX530
Sensor size	1.2"
Pixel size (㎛)	2.74 x 2.74
Resolution	5328 x 4608
Frame Rate (Max.)	94fps
Color / Mono	Mono Crome
Scanning method	Full / ROI / Reverse(X,Y,All) / Decimation (Horizontal + Vertical)
Synchronization	Internal (Freerun), External (CXP or 6Pn Circular), Software trigger via PC
Trigger modes	Fixed shutter, Pulse width shutter
Shutter	Global
Shutter Speed	1us ~ 3sec (Exposure Offset : 별도)
Gain	Analog : 0dB ~ 24dB (1x ~ 15.8x) Digital : 0dB ~ 18dB (1x ~ 8x)
Black level	Analog : 0 ~ 255 (ADC 8bit), 1023 (ADC 10bit), 4095 (ADC 12bit) Digital : 0 ~ 4095 (12bit)
Gamma / LUT	Gamma Correction (0 ~ 3.999), Adjustable LUT (10bit to 10bit)
Auto White Balance	Off / Once / Continuous (Color Model Only)
Auto gain / exposure	Off / Once / Continuous
Interface	CoaXPress-12@2ch / Micro BNC
Pixel Data Format	Mono8/10/12
Function control	Gain/Exposure Auto, Acquisition Frame Rate(Adjustable), Line Debouncer, Defect Pixel Correction, Shading Correction(FFC), Noise Reduction
Lens mount	C mount
Power requirements	PoCXP
Dimension (mm)	50 x 50 x 34 (Without mount, Connector)
Temperature	0℃ ~ 40℃ (Operating) / -20℃ ~ 60℃ (with < 20 ~ 80% RH) (Storage)
Vibration / Shock	98m/s^2 (10G) / 196m/s^2 (20.0G)
Standard compliancy	CE (EN61326-1;2006년; Class A)
Conformity	RoHS, WEEE, FCC
Warranty	3 years

Subject to change without notice

Model	HX-F251M-75
Sensor	Gpixel GMAX0505
Sensor size	1.1"
Pixel size (㎛)	2.5 x 2.5
Resolution	5120 x 5120
Frame Rate (Max.)	75fps
Color / Mono	Mono Crome
Scanning method	Full / ROI / Reverse(X,Y,All) / Decimation (Vertical)
Synchronization	Internal (Freerun), External (CXP or 6Pn Circular), Software trigger via PC
Trigger modes	Fixed shutter, Pulse width shutter
Shutter	Global
Shutter Speed	1us ~ 3sec (Exposure Offset : 별도)
Gain	Digital : x1 ~ x4
Black level	Digital : 0 ~ 1023 (10bit)
Gamma / LUT	Gamma Correction (0 ~ 3.999), Adjustable LUT (10bit to 10bit)
Auto White Balance	Off / Once / Continuous (Color Model Only)
Auto gain / exposure	Off / Once / Continuous
Interface	CoaXPress-12@2ch / Micro BNC
Pixel Data Format	Mono8/10
Function control	Gain/Exposure Auto, Acquisition Frame Rate(Adjustable), Line Debouncer, Defect Pixel Correction, Shading Correction(FFC), Noise Reduction
Lens mount	C mount
Power requirements	PoCXP
Dimension (mm)	50 x 50 x 34 (Without mount, Connector)
Temperature	0℃ ~ 40℃ (Operating) / -20℃ ~ 60℃ (with < 20 ~ 80% RH) (Storage)
Vibration / Shock	98m/s^2 (10G) / 196m/s^2 (20.0G)
Standard compliancy	CE (EN61326-1;2006년; Class A)
Conformity	RoHS, WEEE, FCC
Warranty	3 years

CoaXPress 2.0 Cameras (4Ch)

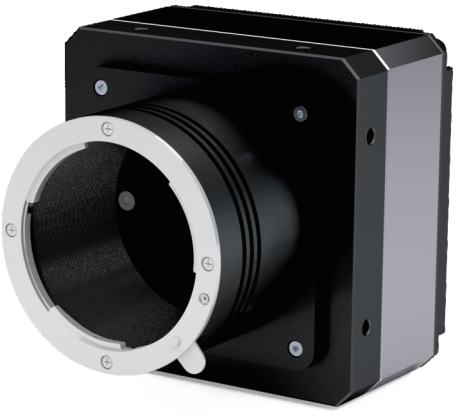

Key Features

High resolution CMOS CoaXPress2.0 Camera (25/67M)
Supporting FFC
Supporting PoCXP
12.5Gbps x 4ch
Max Cable Length : 30meter @ CXP12

Dimension (Unit : mm)

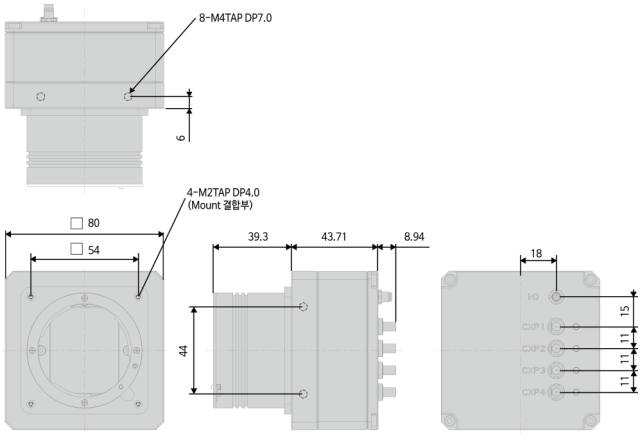

Back Pannel

Pin No.	Name	Description
1	CoaXPress Connector 1	MicroBNC Type
2	CoaXPress Connector 2	MicroBNC Type
3	CoaXPress Connector 3	MicroBNC Type
4	CoaXPress Connector 4	MicroBNC Type
5	LED Indicator 1	LED
6	LED Indicator 2	LED
7	LED Indicator 3	LED
8	LED Indicator 4	LED
9	I/O Connector	4 Pin Circular Connector

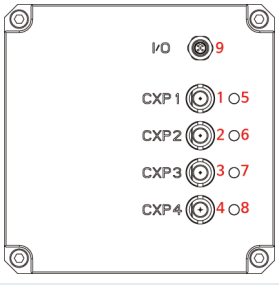

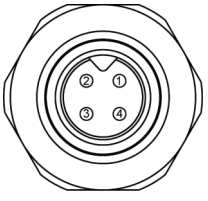

4 pin Circular Connector

Pin No.	Name	IN/OUT	Description
1	GPIO1	IN/OUT	LINE2 (Direct IO, 3.3V)
2	GND	IN	Direct IO GND
3	GPIO2	IN/OUT	LINE3 (Direct IO, 3.3V)
4	GND	IN	Direct IO GND

LED Indicator

State	Indication
No power	Off
System booting	Solid orange
Powered, but nothing connected	Slow pulse red
Connection detection in progress, PoCXP active	Fast flash alternate green / orange
Connection detection in progress, PoCXP not in use	Fast flash orange
Device / Host connected, but no data being transferred	Solid green
Device / Host connected, waiting for event	Slow pulse orange

Subject to change without notice

Model	HX-F251M-150	HX-F251K-150
Sensor	GMAX0505 25M	
Sensor size	1.1"	
Pixel size (㎛)	2.5 x 2.5	
Resolution	5120 x 5120	
Pixel Clock	96MHz	
Frame Rate (Max.)	150fps	
Color / Mono	Mono Chrome	Color
Scanning method	Full / ROI (Horizontal + Vertical) / Reverse (X), Decimation (Y)	
Synchronization	Internal (Freerun), External (CXP or Circular), Software trigger via PC	
Trigger modes	Fixed shutter, Pulse width shutter	
Shutter	Global	
Shutter speed	1us ~ 3sec (Exposure Offset 별도)	
Gain	Digital : 1x ~ 4x	
Black level	Digital : 0 ~ 1023 (10bit)	
Gamma / LUT	Adjustable LUT (10bit to 10bit)	
Auto white balance	Off / Once / Continuous	
Auto gain / exposure	Off / Once / Continuous	
Interface	CoaxPress Standard	
Pixel Data Format	Mono8	Bayer8
SNR	36dB	
Function control	GainAuto, ExposureAuto, BalanceWhiteAuto, Acquisition Frame Rate (Adjustable), Defective Pixel Correction, Shading Correction (FFC)	
Lens mount	C mount	
Video I/F	CoaXPress / Micro-BNC	
Power requirements	PoCXP (Two PoCXP cables required)	
Consumption	PoCXP	
Weight	< 450g	
Dimension (mm)	80 x 80 x 41 (without connector)	
Temperature	0℃ ~ 35℃ (Operating) / -20℃ ~ 60℃ (with < 20 ~ 80% RH) (Storage)	
Vibration / Shock	98m/s^2 (10G) / 196m/s^2 (20.0G)	
Standard compliancy	CE (EN61326-1:2013년; Class A)	
Conformity	RoHS, WEEE, UL	
Warranty	3 years	

Model	HX-E671M-65	HX-E671K-65
Sensor	EMERALD 67M	
Sensor size	APS-C	
Pixel size (㎛)	2.5 x 2.5	
Resolution	8192 x 8192	
Pixel Clock	75.4MHz	
Frame Rate (Max.)	65fps	
Color / Mono	Mono Chrome	Color
Scanning method	Full / ROI (Horizontal + Vertical) / Reverse (X,Y,All)	
Synchronization	Internal (Freerun), External (CXP or Circular), Software trigger via PC	
Trigger modes	Fixed shutter, Pulse width shutter	
Shutter	Global	
Shutter speed	1us ~ 3sec (Exposure Offset 별도)	
Gain	Analog : 1x ~ 3.99x Digital : 1x ~ 4x	
Black level	Digital : 0 ~ 1024 (10bit)	
Gamma / LUT	Adjustable LUT (10bit to 10bit)	
Auto white balance	Off / Once / Continuous	
Auto gain / exposure	Off / Once / Continuous	
Interface	CoaxPress Standard	
Pixel Data Format	Mono8/10	Bayer8/10
SNR	36dB	
Function control	GainAuto, ExposureAuto, BalanceWhiteAuto, Acquisition Frame Rate (Adjustable), Defective Pixel Correction, Shading Correction (FFC), Noise Reduction Filter	
Lens mount	F mount	
Video I/F	CoaXPress / Micro-BNC	
Power requirements	PoCXP (Two PoCXP cables required)	
Consumption	PoCXP	
Weight	< 461g	
Dimension (mm)	80 x 80 x 44.14 (without connector)	
Temperature	0℃ ~ 45℃ (Operating) / -20℃ ~ 60℃ (with < 20 ~ 80% RH) (Storage)	
Vibration / Shock	98m/s^2 (10G) / 196m/s^2 (20.0G)	
Standard compliancy	CE (EN61326-1;2013년; Class A)	
Conformity	RoHS, WEEE, UL	
Warranty	3 years	

Subject to change without notice

USB3.0 Cameras



Key Features

Camera Standard
- GenICam, USB3Vision
Plug & Play
eBus Driver

Pin map

6pin Connector

Pin	Name	IN/OUT	Remark
1	Power	IN	5V ~ 13.2V Input Range
2	Trigger	IN	Opto-Isolated Trigger Input+(2.5V~24V)
3	GPIO1	IN/OUT	General Purpose I/O 1
4	GPIO2	IN/OUT	General Purpose I/O 2
5	Trigger	IN	Opto-Isolated Trigger Input-
6	GND	IN	

Back Pannel

Pin	Name	Remark
1	USB3.1 Gen.1 Connector	Type Micro-B
2	Power & I/O Connector	6Pin Circular
3	LED Indicator	LED

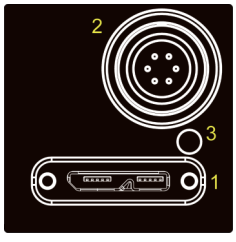

Dimension (Unit : mm)

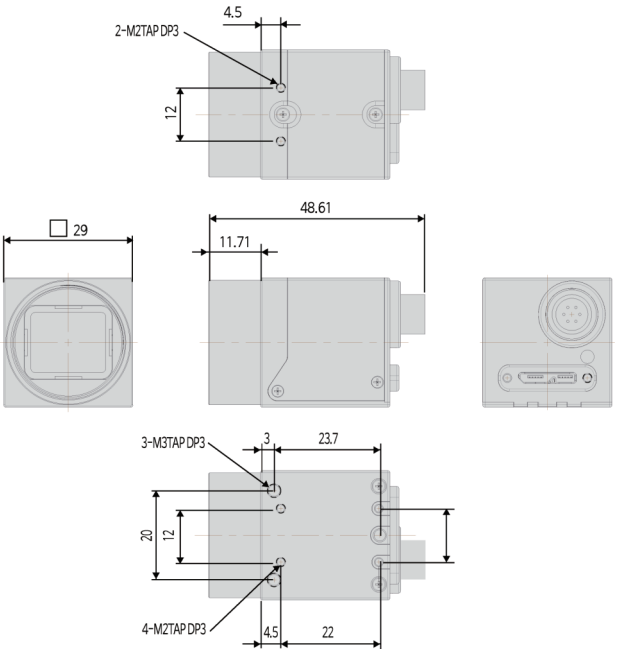

Download (File name)

ex) SDK download:
CREVIS Site ▶ Search window ▶ File name

SDK : MCamU_Basic.zip

Model		MU-A040M-523	MU-A040K-523
Sensor		Sony CMOS Pregius IMX287	
Sensor size		1/2.9"	
Pixel size (㎛)		6.9 x 6.9	
Resolution		728 x 544	
Frame Rate (Max.)		523fps	
Color / Mono		Mono Chrome	Color
Scanning method		Full / ROI (Horizontal + Vertical) / Reverse (X,Y,All)	
Synchronization		Internal (Freerun), External, Software trigger via PC	
Trigger modes		Fixed shutter, Pulse width shutter	
Shutter		Global	
Shutter speed		1us ~ 3sec (Exposure Offset : 별도)	
Gain		Analog : 0dB ~ 27.6dB (1x ~ 24x) Digital : 0dB ~ 18dB (1x ~ 8x)	
Black level		Analog : 0 ~ 255 (8bit) / Digital : 0 ~ 4095 (12bit)	
Gamma / LUT		Gamma Correction, Adjustable LUT (12bit to 12bit)	
Auto white balance		Off / Once / Continuous (Only Color Models)	
Auto gain / exposure		Off / Once / Continuous	
Interface		USB3.1 Gen. 1 (USB3 Vision Standard 1.1)	
Pixel Data Format		Mono8/10/12	Mono8/10/12, BayerRG8/10/12, RGB8
SNR		35dB	
Function control		GainAuto, ExposureAuto, BalanceWhiteAuto, Acquisition Frame Rate (Adjustable), Line Debouncer, Defective Pixel Correction, Shading Correction (FFC), Color Transformation Control, NoiseReduction	
Lens mount		C mount	
Power requirements		DC 5V ~ 13.2V ± 10% or USB3 Bus	
Consumption	DC	< 3.3W	
	USB	< 3.3W (Max.)	
Weight		< 44g	
Dimension (mm)		29 x 29 x 29 (without mount)	
Temperature		0℃ ~ 40℃ (Operating) / -20℃ ~ 60℃ (Storage)-(with < 20 ~ 80% RH)	
Vibration / Shock		98m/s^2 (10G) / 196m/s^2 (20.0G)	
Standard compliancy		CE (EN61326-1:2013년; Class A)	
Conformity		RoHS, WEEE, UL, FCC	
Warranty		3 years	

Subject to change without notice

Model		MU-A160M-226	MU-A160K-226
Sensor		Sony CMOS Pregius IMX273	
Sensor size		1/2.9"	
Pixel size (㎛)		3.45 x 3.45	
Resolution		1456 x 1088	
Frame Rate (Max.)		226fps	
Color / Mono		Mono Chrome	Color
Scanning method		Full / ROI (Horizontal + Vertical) / Reverse (X,Y,All) / Decimation (X,Y,All) / Binning (Only Mono Model)	
Synchronization		Internal (Freerun), External, Software trigger via PC	
Trigger modes		Fixed shutter, Pulse width shutter	
Shutter		Global	
Shutter speed		1us ~ 3sec (Exposure Offset : 별도)	
Gain		Analog : 0dB ~ 27.6dB (1x ~ 24x) Digital : 0dB ~ 18dB (1x ~ 8x)	
Black level		Analog : 0 ~ 255 (8bit) / Digital : 0 ~ 4095 (12bit)	
Gamma / LUT		Gamma Correction, Adjustable LUT (12bit to 12bit)	
Auto white balance		Off / Once / Continuous (Only Color Models)	
Auto gain / exposure		Off / Once / Continuous	
Interface		USB3.1 Gen. 1 (USB3 Vision Standard 1.1)	
Pixel Data Format		Mono8/10/12	Mono8/10/12, BayerRG8/10/12, RGB8
SNR		38dB	
Function control		GainAuto, ExposureAuto, BalanceWhiteAuto, Acquisition Frame Rate (Adjustable), Line Debouncer, Defective Pixel Correction, Shading Correction (FFC), Color Transformation Control, NoiseReduction	
Lens mount		C mount	
Power requirements		DC 5V ~ 13.2V ± 10% or USB3 Bus	
Consumption	DC	< 3.2W	
	USB	< 3.7W (Max.)	
Weight		< 44g	
Dimension (mm)		29 x 29 x 29 (without mount)	
Temperature		0℃ ~ 40℃ (Operating) / -20℃ ~ 60℃ (Storage)-(with < 20 ~ 80% RH)	
Vibration / Shock		98m/s^2 (10G) / 196m/s^2 (20.0G)	
Standard compliancy		CE (EN61326-1:2013년; Class A)	
Conformity		RoHS, WEEE, UL, FCC	
Warranty		3 years	

Model		MU-A320M-118	MU-A320K-118
Sensor		Sony CMOS Pregius IMX252	
Sensor size		1/1.8”	
Pixel size (㎛)		3.45 x 3.45	
Resolution		2064 x 1544	
Frame Rate (Max.)		118fps	
Color / Mono		Mono Chrome	Color
Scanning method		Full / ROI (Horizontal + Vertical) / Reverse (X,Y,All) / Decimation (X,Y,All) / Binning (Only Mono Model)	
Synchronization		Internal (Freerun), External, Software trigger via PC	
Trigger modes		Fixed shutter, Pulse width shutter	
Shutter		Global	
Shutter speed		1us ~ 3sec (Exposure Offset : 별도)	
Gain		Analog : 0dB ~ 27.6dB (1x ~ 24x) Digital : 0dB ~ 18dB (1x ~ 8x)	
Black level		Analog : 0 ~ 255 (8bit) / Digital : 0 ~ 4095 (12bit)	
Gamma / LUT		Gamma Correction, Adjustable LUT (12bit to 12bit)	
Auto white balance		Off / Once / Continuous (Only Color Models)	
Auto gain / exposure		Off / Once / Continuous	
Interface		USB3.1 Gen. 1 (USB3 Vision Standard 1.1)	
Pixel Data Format		Mono8/10/12	Mono8/10/12, BayerRG8/10/12, RGB8
SNR		36dB	
Function control		GainAuto, ExposureAuto, BalanceWhiteAuto, Acquisition Frame Rate (Adjustable), Line Debouncer, Defective Pixel Correction, Shading Correction (FFC), Color Transformation Control, NoiseReduction	
Lens mount		C mount	
Power requirements		DC 5V ~ 13.2V ± 10% or USB3 Bus	
Consumption	DC	< 4.0W	
	USB	< 4.7W (Max.)	
Weight		< 44g	
Dimension (mm)		29 x 29 x 29 (without mount)	
Temperature		0℃ ~ 40℃ (Operating) / -20℃ ~ 60℃ (Storage)-(with < 20 ~ 80% RH)	
Vibration / Shock		98m/s^2 (10G) / 196m/s^2 (20.0G)	
Standard compliancy		CE (EN61326-1:2013년; Class A)	
Conformity		RoHS, WEEE, UL, FCC	
Warranty		3 years	

Subject to change without notice

Model		MU-A320M-55	MU-A320K-55
Sensor		Sony CMOS Pregius IMX265	
Sensor size		1/1.8”	
Pixel size (㎛)		3.45 x 3.45	
Resolution		2064 x 1544	
Frame Rate (Max.)		55fps	
Color / Mono		Mono Chrome	Color
Scanning method		Full / ROI (Horizontal + Vertical) / Reverse (X,Y,All) / Decimation (X,Y,All)	
Synchronization		Internal (Freerun), External, Software trigger via PC	
Trigger modes		Fixed shutter, Pulse width shutter	
Shutter		Global	
Shutter speed		1us ~ 3sec (Exposure Offset : 별도)	
Gain		Analog : 0dB ~ 27.6dB (1x ~ 24x) Digital : 0dB ~ 18dB (1x ~ 8x)	
Black level		Analog : 0 ~ 255 (8bit) / Digital : 0 ~ 4095 (12bit)	
Gamma / LUT		Gamma Correction, Adjustable LUT (12bit to 12bit)	
Auto white balance		Off / Once / Continuous (Only Color Models)	
Auto gain / exposure		Off / Once / Continuous	
Interface		USB3.1 Gen. 1 (USB3 Vision Standard 1.1)	
Pixel Data Format		Mono8/10/12	Mono8/10/12, BayerRG8/10/12, RGB8
SNR		39dB	
Function control		GainAuto, ExposureAuto, BalanceWhiteAuto, Acquisition Frame Rate (Adjustable), Line Debouncer, Defective Pixel Correction, Shading Correction (FFC), Color Transformation Control, NoiseReduction	
Lens mount		C mount	
Power requirements		DC 5V ~ 13.2V ± 10% or USB3 Bus	
Consumption	DC	< 3.1W	
	USB	< 3.4W (Max.)	
Weight		< 44g	
Dimension (mm)		29 x 29 x 29 (without mount)	
Temperature		0℃ ~ 40℃ (Operating) / -20℃ ~ 60℃ (Storage)-(with < 20 ~ 80% RH)	
Vibration / Shock		98m/s^2 (10G) / 196m/s^2 (20.0G)	
Standard compliancy		CE (EN61326-1:2013년; Class A)	
Conformity		RoHS, WEEE, UL, FCC	
Warranty		3 years	

Model		MU-A500M-35	MU-A500K-35
Sensor		Sony CMOS Pregius IMX264	
Sensor size		2/3"	
Pixel size (㎛)		3.45 x 3.45	
Resolution		2464 x 2056	
Frame Rate (Max.)		35fps	
Color / Mono		Mono Chrome	Color
Scanning method		Full / ROI (Horizontal + Vertical) / Reverse (X,Y,All) / Decimation (X,Y,All)	
Synchronization		Internal (Freerun), External, Software trigger via PC	
Trigger modes		Fixed shutter, Pulse width shutter	
Shutter		Global	
Shutter speed		1us ~ 3sec (Exposure Offset : 별도)	
Gain		Analog : 0dB ~ 27.6dB (1x ~ 24x) Digital : 0dB ~ 18dB (1x ~ 8x)	
Black level		Analog : 0 ~ 255 (8bit) / Digital : 0 ~ 4095 (12bit)	
Gamma / LUT		Gamma Correction, Adjustable LUT (12bit to 12bit)	
Auto white balance		Off / Once / Continuous (Only Color Models)	
Auto gain / exposure		Off / Once / Continuous	
Interface		USB3.1 Gen. 1 (USB3 Vision Standard 1.1)	
Pixel Data Format		Mono : Mono8/10/12	Color : Mono8/10/12, BayerRG8/10/12, RGB8
SNR		38dB	
Function control		GainAuto, ExposureAuto, BalanceWhiteAuto, Acquisition Frame Rate (Adjustable), Line Debouncer, Defective Pixel Correction, Shading Correction (FFC), Color Transformation Control, NoiseReduction	
Lens mount		C mount	
Power requirements		DC 5V ~ 13.2V ± 10% or USB3 Bus	
Consumption	DC	< 3.2W	
	USB	< 3.4W (Max.)	
Weight		< 44g	
Dimension (mm)		29 x 29 x 29 (without mount)	
Temperature		0℃ ~ 40℃ (Operating) / -20℃ ~ 60℃ (Storage)-(with < 20 ~ 80% RH)	
Vibration / Shock		98m/s^2 (10G) / 196m/s^2 (20.0G)	
Standard compliancy		CE (EN61326-1:2013년; Class A)	
Conformity		RoHS, WEEE, UL, FCC	
Warranty		3 years	

Subject to change without notice

Model		MU-A121M-23	MU-A121K-23
Sensor		Sony CMOS Pregius IMX304	
Sensor size		1.1”	
Pixel size (㎛)		3.45 x 3.45	
Resolution		4112 x 3008	
Frame Rate (Max.)		23fps	
Color / Mono		Mono Chrome	Color
Scanning method		Full / ROI (Horizontal + Vertical) / Reverse (X,Y,All) / Decimation (X,Y,All)	
Synchronization		Internal (Freerun), External, Software trigger via PC	
Trigger modes		Fixed shutter, Pulse width shutter	
Shutter		Global	
Shutter speed		1us ~ 3sec (Exposure Offset : 별도)	
Gain		Analog : 0dB ~ 27.6dB (1x ~ 24x) Digital : 0dB ~ 18dB (1x ~ 8x)	
Black level		Analog : 0 ~ 255 (8bit) / Digital : 0 ~ 4095 (12bit)	
Gamma / LUT		Gamma Correction, Adjustable LUT (12bit to 12bit)	
Auto white balance		Off / Once / Continuous (Only Color Models)	
Auto gain / exposure		Off / Once / Continuous	
Interface		USB3.1 Gen. 1 (USB3 Vision Standard 1.1)	
Pixel Data Format		Mono8/10/12	Mono8/10/12, BayerRG8/10/12, RGB8
SNR		38dB	
Function control		GainAuto, ExposureAuto, BalanceWhiteAuto, Acquisition Frame Rate (Adjustable), Line Debouncer, Defective Pixel Correction, Shading Correction (FFC), Color Transformation Control, NoiseReduction	
Lens mount		C mount	
Power requirements		DC 5V ~ 13.2V ± 10% or USB3 Bus	
Consumption	DC	< 3.6W	
	USB	< 3.9W (Max.)	
Weight		< 44g	
Dimension (mm)		29 x 29 x 29 (without mount)	
Temperature		0℃ ~ 40℃ (Operating) / -20℃ ~ 60℃ (Storage)-(with < 20 ~ 80% RH)	
Vibration / Shock		98m/s^2 (10G) / 196m/s^2 (20.0G)	
Standard compliancy		CE (EN61326-1:2013년; Class A)	
Conformity		RoHS, WEEE, UL, FCC	
Warranty		3 years	

Model		MU-A121R-31	MU-A121L-31
Sensor		Sony CMOS Starvis IMX226	
Sensor size		1/1.7”	
Pixel size (㎛)		1.85 x 1.85	
Resolution		4072 x 3046	
Frame Rate (Max.)		31fps	
Color / Mono		Mono Chrome	Color
Scanning method		Full / ROI (Horizontal + Vertical) / Reverse (X,Y,All)	
Synchronization		Internal (Freerun), External, Software trigger via PC	
Trigger modes		Fixed shutter, Pulse width shutter	
Shutter		Rolling, Global Reset	
Shutter speed		99us ~ 3sec	
Gain		Analog : 0dB ~ 27.6dB (1x ~ 22.5x) Digital : 0dB ~ 18dB (1x ~ 8x)	
Black level		Analog : 0 ~ 255 (8bit) / Digital : 0 ~ 4095 (12bit)	
Gamma / LUT		Gamma Correction, Adjustable LUT (12bit to 12bit)	
Auto white balance		Off / Once / Continuous (Only Color Models)	
Auto gain / exposure		Off / Once / Continuous	
Interface		USB3.1 Gen. 1 (USB3 Vision Standard 1.1)	
Pixel Data Format		Mono8/10/12	Mono8/10/12, BayerRG8/10/12, RGB8
SNR		36dB	
Function control		GainAuto, ExposureAuto, BalanceWhiteAuto, Acquisition Frame Rate (Adjustable), Line Debouncer, Defective Pixel Correction, Shading Correction (FFC), Color Transformation Control, NoiseReduction	
Lens mount		C mount	
Power requirements		DC 5V ~ 13.2V ± 10% or USB3 Bus	
Consumption	DC	< 3.6W	
	USB	< 3.8W (Max.)	
Weight		< 44g	
Dimension (mm)		29 x 29 x 29 (without mount)	
Temperature		0℃ ~ 40℃ (Operating) / -20℃ ~ 60℃ (Storage)-(with < 20 ~ 80% RH)	
Vibration / Shock		98m/s^2 (10G) / 196m/s^2 (20.0G)	
Standard compliancy		CE (EN61326-1:2013년; Class A)	
Conformity		RoHS, WEEE, UL, FCC	
Warranty		3 years	

Subject to change without notice

Model		MU-A201R-18	MU-A201L-18
Sensor		Sony CMOS Starvis IMX183	
Sensor size		1”	
Pixel size (㎛)		2.4 x 2.4	
Resolution		5496 x 3672	
Frame Rate (Max.)		18fps	
Color / Mono		Mono Chrome	Color
Scanning method		Full / ROI (Horizontal + Vertical) / Reverse (X,Y,All)	
Synchronization		Internal (Freerun), External, Software trigger via PC	
Trigger modes		Fixed shutter, Pulse width shutter	
Shutter		Rolling, Global Reset	
Shutter speed		141us ~ 3sec	
Gain		Analog : 0dB ~ 27.6dB (1x ~ 22.5x) Digital : 0dB ~ 18dB (1x ~ 8x)	
Black level		Analog : 0 ~ 255 (8bit) / Digital : 0 ~ 4095 (12bit)	
Gamma / LUT		Gamma Correction, Adjustable LUT (12bit to 12bit)	
Auto white balance		Off / Once / Continuous	
Auto gain / exposure		Off / Once / Continuous	
Interface		USB3.1 Gen. 1 (USB3 Vision Standard 1.1)	
Pixel Data Format		Mono8/10/12	Mono8/10/12, BayerRG8/10/12, RGB8
SNR		41dB	
Function control		GainAuto, ExposureAuto, BalanceWhiteAuto, Acquisition Frame Rate (Adjustable), Line Debouncer, Defective Pixel Correction, Shading Correction (FFC), Color Transformation Control, NoiseReduction	
Lens mount		C mount	
Power requirements		DC 5V ~ 13.2V ± 10% or USB3 Bus	
Consumption	DC	< 4.0W	
	USB	< 4.0W (Max.)	
Weight		< 44g	
Dimension (mm)		29 x 29 x 29 (without mount)	
Temperature		0℃ ~ 40℃ (Operating) / -20℃ ~ 60℃ (Storage)-(with < 20 ~ 80% RH)	
Vibration / Shock		98m/s^2 (10G) / 196m/s^2 (20.0G)	
Standard compliancy		CE (EN61326-1;2013년; Class A)	
Conformity		RoHS, WEEE, UL	
Warranty		3 years	

CREVIS

Line Scan Cameras



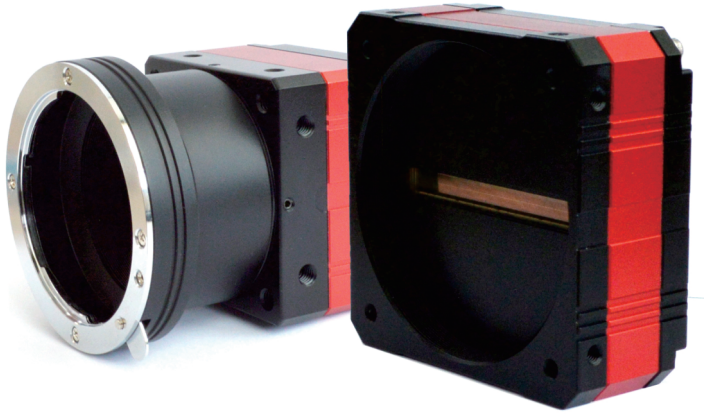

Key Features

2, 4, 8, 16K CMOS Line scan camera
High sensitivity & Speed
Standard cameralink interface
PRNU supported
CamguideCL

Pin map

Pin	Name	IN/OUT	Description
1	PWR	IN	10.8V~13.2V Input Range
2	PWR	IN	10.8V~13.2V Input Range
3	-	-	-
4	-	-	-
5	GND	IN	Power GND
6	GND	IN	Power GND

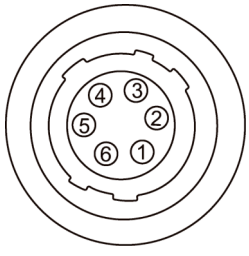

Dimension (Unit : mm)

[2K, 4K]

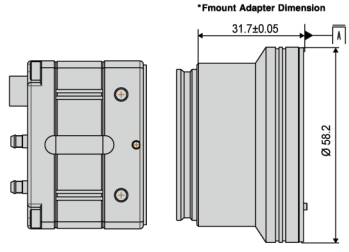

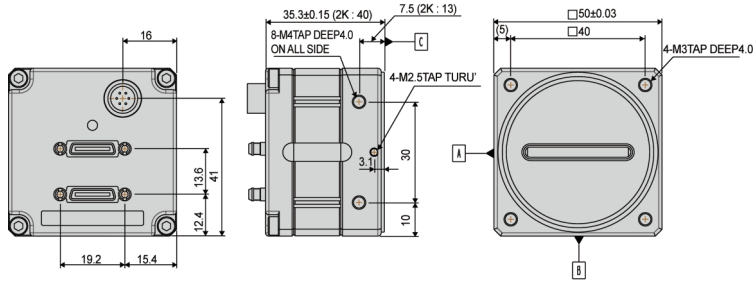

[8K, 16K]

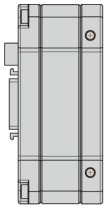

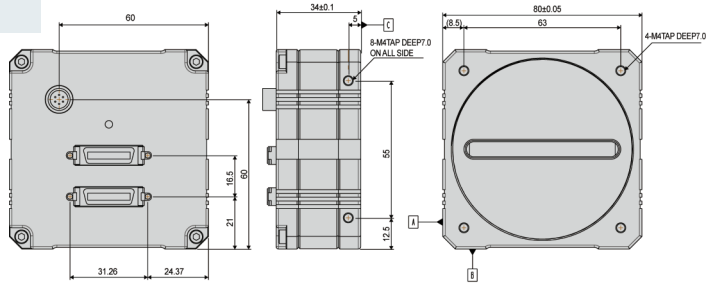

Download (File name)

ex) SDK download:
CREVIS Site ▶ Search window ▶ File name

CamguideCL : CamguideCL.zip
Camfile : Linescan_Camfile.zip

Subject to change without notice

Model (Mono)	LV-M422C	LV-M824C
Image sensor	DR-2X2K-7-LCC	DR-2X4K-7
Pixel number	2,048 x 2	4,096 x 2
Sensor size	Linear CMOS	
Pixel size (㎛)	7 x 7	7 x 7
Max. Line rates	141KHz	
Video output type	CameraLink™	
Pixel clock	80MHz	
Gain	0~19dB	
Lens mount	C/F Mount	F Mount
Pixel Data Format	mono 8/10/12	
Gamma	LUT	
Digital I/F	CameraLink Base,Medium	CameraLink Medium, Full
Power requirement	12VDC ± 10%, PoCL	
Connector	SDR x 2/6pin Circular (Power Only)	
Serial I/F	RS-232C	
Temperature	0℃ ~ 45℃	
Operating humidity	Humidity 20% to 80% Non-Condensation	
Dimension (mm)	50 x 50 x 40	50 x 50 x 35.3
Power consumption	< 2.8W	< 5.3W
Weight	< 188g	< 200g
Alignment accuracy	dΘ:<±0.2º	
Conformity	CE, RoHS	
Warranty	3 years	

Model (Mono)	LV-M818C	LV-M8116C
Image sensor	DR-1X8K-7	DR-16K-3.5
Pixel number	8,192 x 1	16,384 x 1
Pixel size (㎛)	7 x 7	3.5 x 3.5
Max. Line rates	75KHz	37.5KHz
Video output type	CameraLink™	
Pixel clock	85MHz	
Gain	0~19dB	
Lens mount	M72 Mount	
Pixel Data Format	mono 8/10/12	
Gamma	LUT	
Digital I/F	CameraLink Medium, Full	
Power requirement	12VDC ± 10%	
Connector	MDR x 2/6pin Circular (Power Only)	
Serial I/F	RS-232C	
Operating humidity	Humidity 20% to 80% Non-Condensation	
Dimension (mm)	80 x 80 x 34	
Power consumption	< 6W	< 5.8W
Weight	< 271g	
Alignment accuracy	dΘ:<±0.2º	
Conformity	CE, RoHS	
Warranty	3 years	

Subject to change without notice

NEW PRODUCT RELEASE

CoaXPress 2.1
CFG-X1204 출시

* Total Vision Solution의 완성

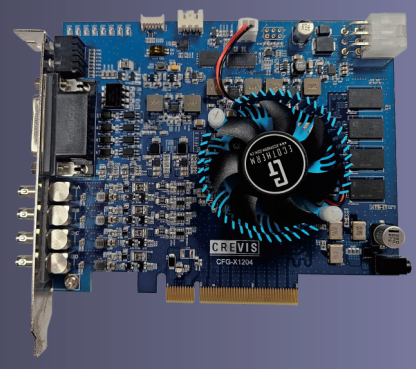

CFG-X1204 핵심 하이라이트

CoaXPress 2.1
최신 CXP12 속도 지원으로
고속 데이터 전송 실현

PCIe Gen3
x8 Lane 인터페이스 탑재
안정적인 대역폭 확보

4-Channel
Micro-BNC 커넥터 채용
유연한 멀티 카메라 구성

PoCXP Power
케이블 하나로 전원까지 공급
간결한 시스템 배선

Technical Specifications

IPC Interface	PCI Express Gen3, 8Lane
Camera Interface	CoaXPress 2.1 : CXP12
CXP HOST Connector	4 x Micro-BNC
Max. Camera Support	One 1- or 2- connection, Two 1- or 2- connection, Four connection camera 지원
PoCXP Power	24VDC@17W/one connector
Dimensions	132 x 103mm

Why Crevis?

- **최적화된 안정성**
  자사 카메라와 완벽 호환
- **검증 간소화**
  통합 공급으로 리소스 절약
- **원스톱 기술 지원**
  단일 창구의 신속한 응대
- **SW 마이그레이션**
  기존 보드 변경 기술 지원

FLU120 시리즈

- 25MP, 1.2” 센서 지원
- 소형 사이즈
- 왜곡 최소화
- 합리적인 금액



Brand New

크래비스 렌즈 최적의 렌즈 솔루션!

• 고정 초점거리 렌즈

FLS118 시리즈
6MP, 1/1.8” 센서 지원

FLH230 시리즈
10MP, 2/3” 센서 지원

FLU110 시리즈
20MP, 1.1” 센서 지원

FLU120 시리즈
25MP, 1.2” 센서 지원

• 텔레센트릭 렌즈

TLH 시리즈
5MP, 2/3” 센서 지원

TLU 시리즈
25MP, 1.1” 센서 지원

Model	Sensor Size	Resolution	Focal Length	F#	M.O.D	Filter Size	Mount
FLU120-F18	1.2”	25M	18mm	4.0-16	100mm	M35.5xP0.5	C
FLU120-F20	1.2”	25M	20mm	3.5-16	200mm	M35.5xP0.5	C
FLU120-F25	1.2”	25M	25mm	4.0-16	150mm	M35.5xP0.5	C
FLU120-F35	1.2”	25M	35mm	4.0-16	180mm	M35.5xP0.5	C
FLU120-F50	1.2”	25M	50mm	4.0-16	300mm	M35.5xP0.5	C
FLU120-F70	1.2”	25M	70mm	4.0-16	300mm	M35.5xP0.5	C
FLU120-F75	1.2”	25M	75mm	4.0-16	300mm	M35.5xP0.5	C
FLU120-F100	1.2”	25M	100mm	4.0-16	450mm	M35.5xP0.5	C

Subject to change without notice

Lens Comparison Chart

Model	Sensor Size	Resolution	Focal Length	F#	M.O.D	Filter Size	Mount
FLS118-F06	1/1.8"	6M	6mm	2.0-16	100mm	/	C
FLS118-F08	1/1.8"	6M	8mm	2.8-16	75mm	M27xP0.5	C
FLS118-F12	1/1.8"	6M	12mm	2.8-16	110mm	M27xP0.5	C
FLS118-F16	1/1.8"	6M	16mm	2.8-16	110mm	M27xP0.5	C
FLS118-F25	1/1.8"	6M	25mm	2.8-16	150mm	M27xP0.5	C
FLS118-F35	1/1.8"	6M	35mm	2.8-16	200mm	M27xP0.5	C
FLS118-F50	1/1.8"	6M	50mm	2.8-16	300mm	M27xP0.5	C

Model	Sensor Size	Resolution	Focal Length	F#	M.O.D	Filter Size	Mount
FLH230-F08	2/3"	10M	8mm	2.6-16	110mm	/	C
FLH230-F12	2/3"	10M	12mm	2.0-16	110mm	M27xP0.5	C
FLH230-F16	2/3"	10M	16mm	2.0-16	100mm	M27xP0.5	C
FLH230-F25	2/3"	10M	25mm	2.0-16	200mm	M25.5xP0.5	C
FLH230-F35	2/3"	10M	35mm	2.0-16	200mm	M31.5xP0.5	C
FLH230-F50	2/3"	10M	50mm	2.0-16	300mm	M30.5xP0.5	C
FLH230-F75	2/3"	10M	75mm	2.0-16	400mm	M44.5xP0.5	C

Model	Sensor Size	Resolution	Focal Length	F#	M.O.D	Filter Size	Mount
FLU100-F12	1.1"	20M	12mm	2.8-16	100mm	/	C
FLU100-F16	1.1"	20M	16mm	2.8-16	100mm	M35.5xP0.5	C
FLU100-F25	1.1"	20M	25mm	2.8-16	150mm	M35.5xP0.5	C
FLU100-F35	1.1"	20M	35mm	2.8-16	200mm	M35.5xP0.5	C
FLU100-F50	1.1"	20M	50mm	2.8-16	300mm	M35.5xP0.5	C

Model	Sensor Size	Resolution	Focal Length	F#	M.O.D	Filter Size	Mount
FLU120-F18	1.2"	25M	18mm	4.0-16	100mm	M35.5xP0.5	C
FLU120-F20	1.2"	25M	20mm	3.5-16	200mm	M35.5xP0.5	C
FLU120-F25	1.2"	25M	25mm	4.0-16	150mm	M35.5xP0.5	C
FLU120-F35	1.2"	25M	35mm	4.0-16	180mm	M35.5xP0.5	C
FLU120-F50	1.2"	25M	50mm	4.0-16	300mm	M35.5xP0.5	C
FLU120-F70	1.2"	25M	70mm	4.0-16	300mm	M35.5xP0.5	C
FLU120-F75	1.2"	25M	75mm	4.0-16	300mm	M35.5xP0.5	C
FLU120-F100	1.2"	25M	100mm	4.0-16	450mm	M35.5xP0.5	C

FLS118 Series

Fixed Focal Length Lenses

- Supports 6MP 1/1.8 inches



Model	Sensor Size	Resolution	Focal Length	F#	M.O.D	Filter Size	Mount
FLS118-F06	1/1.8"	6M	6mm	2.0-16	100mm	/	C
FLS118-F08	1/1.8"	6M	8mm	2.8-16	75mm	M27xP0.5	C
FLS118-F12	1/1.8"	6M	12mm	2.8-16	110mm	M27xP0.5	C
FLS118-F16	1/1.8"	6M	16mm	2.8-16	110mm	M27xP0.5	C
FLS118-F25	1/1.8"	6M	25mm	2.8-16	150mm	M27xP0.5	C
FLS118-F35	1/1.8"	6M	35mm	2.8-16	200mm	M27xP0.5	C
FLS118-F50	1/1.8"	6M	50mm	2.8-16	300mm	M27xP0.5	C

FLS118-F06

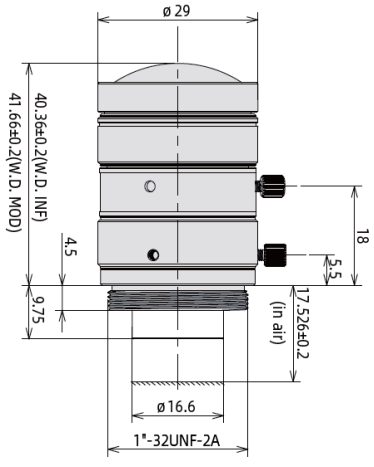

FLS118-F08

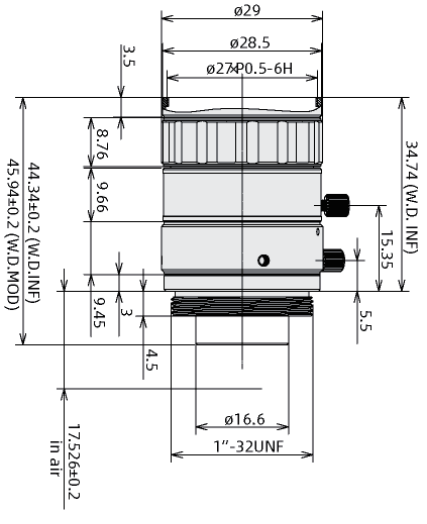

Subject to change without notice

FLS118-F12

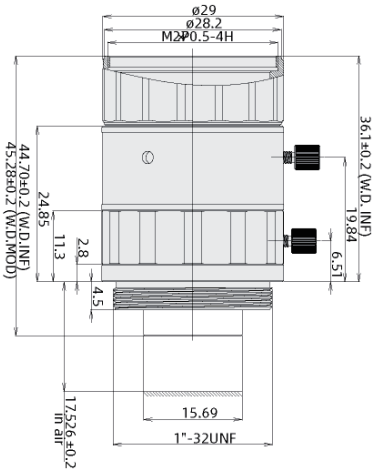

FLS118-F16

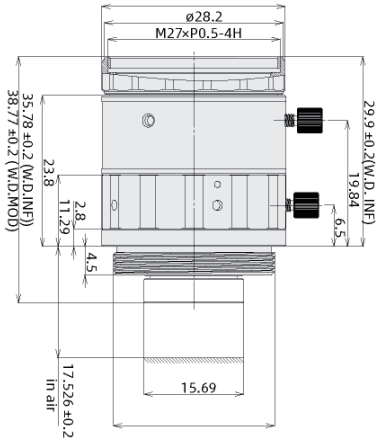

FLS118-F25

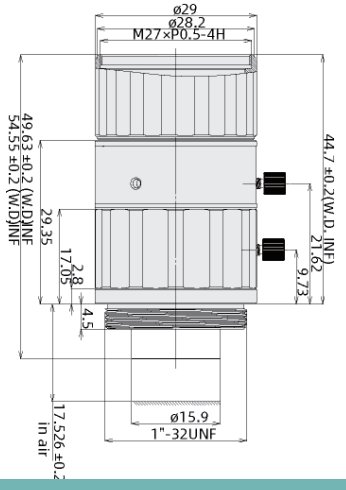

FLS118-F35

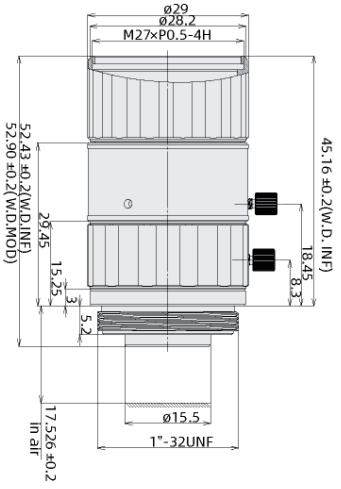

FLS118-F50

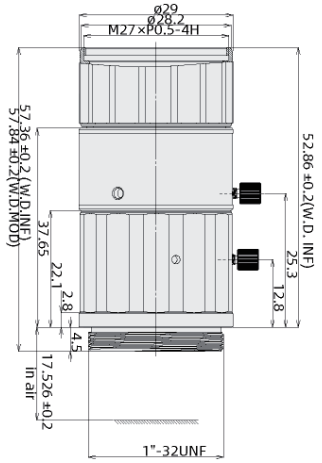

FLH230 Series

Fixed Focal Length Lenses

- Supports 10MP 2/3 inches



Model	Sensor Size	Resolution	Focal Length	F#	M.O.D	Filter Size	Mount
FLH230-F08	2/3"	10M	8mm	2.6-16	110mm	/	C
FLH230-F12	2/3"	10M	12mm	2.0-16	110mm	M27xP0.5	C
FLH230-F16	2/3"	10M	16mm	2.0-16	100mm	M27xP0.5	C
FLH230-F25	2/3"	10M	25mm	2.0-16	200mm	M25.5xP0.5	C
FLH230-F35	2/3"	10M	35mm	2.0-16	200mm	M31.5xP0.5	C
FLH230-F50	2/3"	10M	50mm	2.0-16	300mm	M30.5xP0.5	C
FLH230-F75	2/3"	10M	75mm	2.0-16	400mm	M44.5xP0.5	C

FLH230-F08

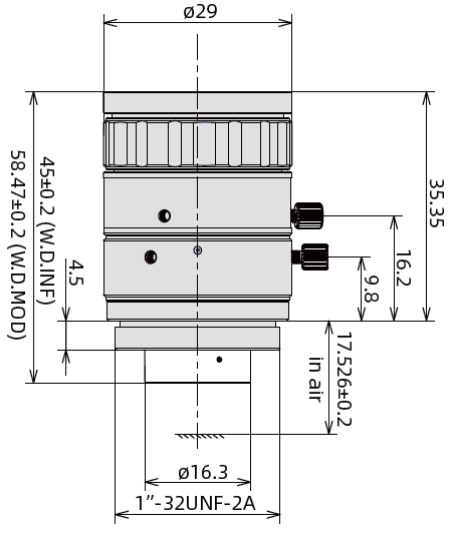

FLH230-F12

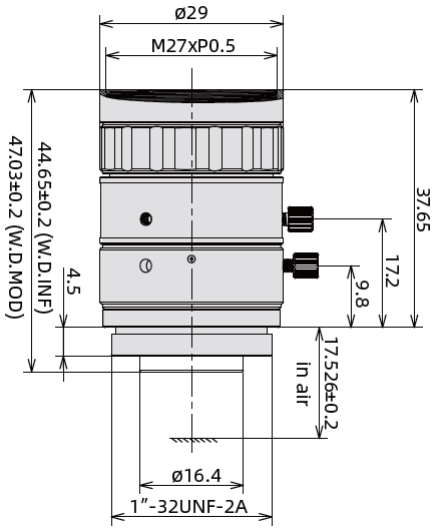

Subject to change without notice

FLH230-F16

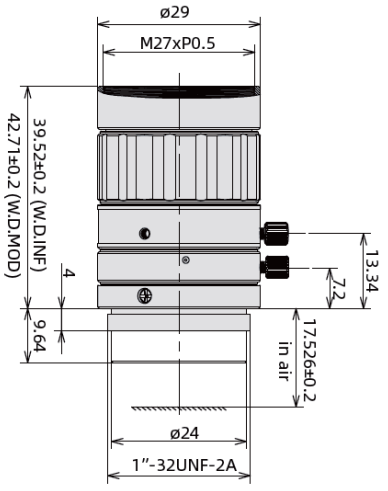

FLH230-F25

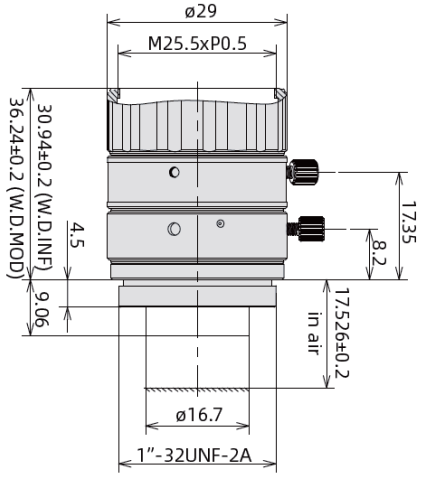

FLH230-F35

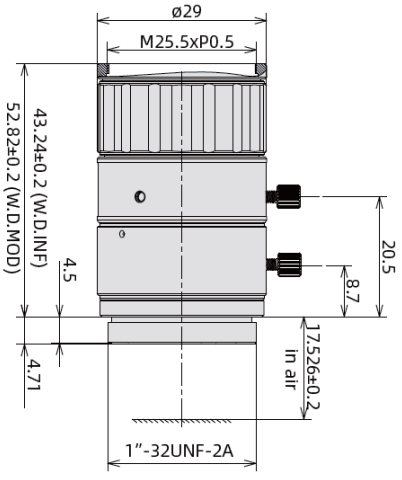

FLH230-F50

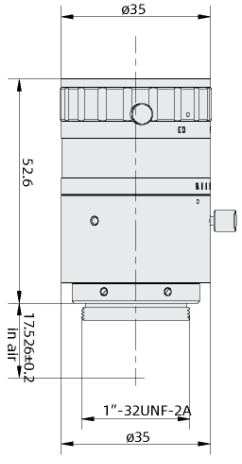

FLH230-F75

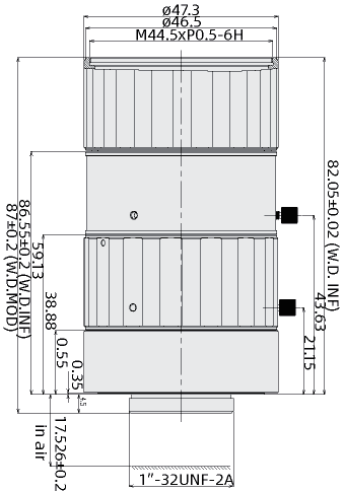

FLU100 Series

Fixed Focal Length Lenses

- Supports 20MP 1.1 inches



Model	Sensor Size	Resolution	Focal Length	F#	M.O.D	Filter Size	Mount
FLU100-F12	1.1"	20M	12mm	2.8-16	100mm	/	C
FLU100-F16	1.1"	20M	16mm	2.8-16	100mm	M35.5xP0.5	C
FLU100-F25	1.1"	20M	25mm	2.8-16	150mm	M35.5xP0.5	C
FLU100-F35	1.1"	20M	35mm	2.8-16	200mm	M35.5xP0.5	C
FLU100-F50	1.1"	20M	50mm	2.8-16	300mm	M35.5xP0.5	C

FLU100-F12

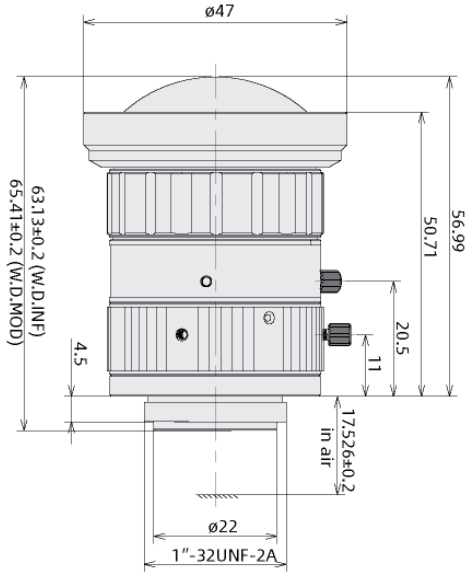

FLU100-F16

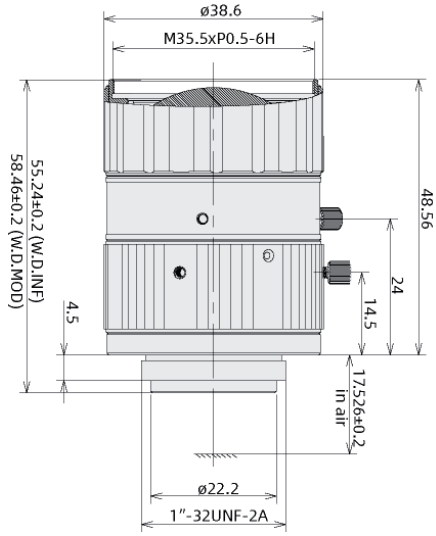

Subject to change without notice

FLU100-F25

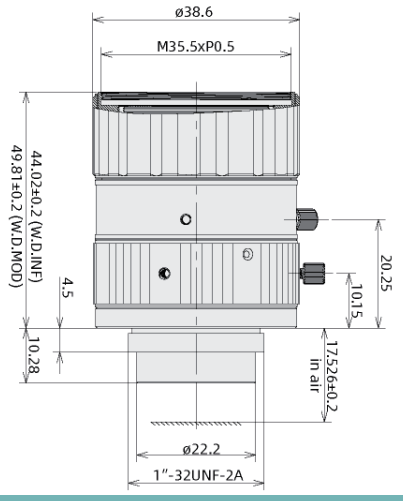

FLU100-F35

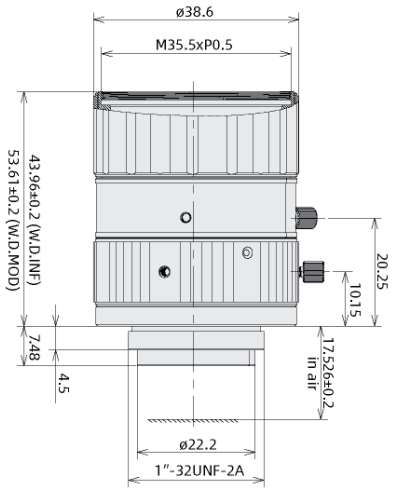

FLU100-F50

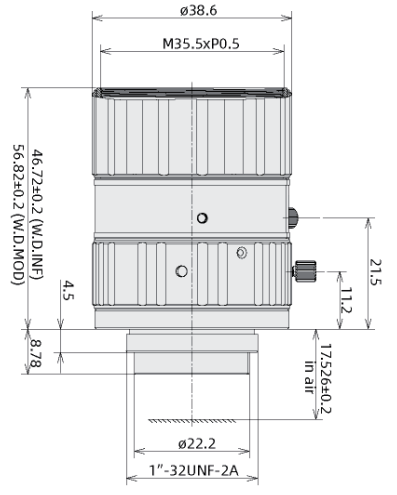

FLU120 Series

Fixed Focal Length Lenses

- Supports 24MP 1.2 inches



Model	Sensor Size	Resolution	Focal Length	F#	M.O.D	Filter Size	Mount
FLU120-F18	1.2"	25M	18mm	4.0-16	100mm	M35.5xP0.5	C
FLU120-F20	1.2"	25M	20mm	3.5-16	200mm	M35.5xP0.5	C
FLU120-F25	1.2"	25M	25mm	4.0-16	150mm	M35.5xP0.5	C
FLU120-F35	1.2"	25M	35mm	4.0-16	180mm	M35.5xP0.5	C
FLU120-F50	1.2"	25M	50mm	4.0-16	300mm	M35.5xP0.5	C
FLU120-F70	1.2"	25M	70mm	4.0-16	300mm	M35.5xP0.5	C
FLU120-F75	1.2"	25M	75mm	4.0-16	300mm	M35.5xP0.5	C
FLU120-F100	1.2"	25M	100mm	4.0-16	450mm	M35.5xP0.5	C

FLU120-F18

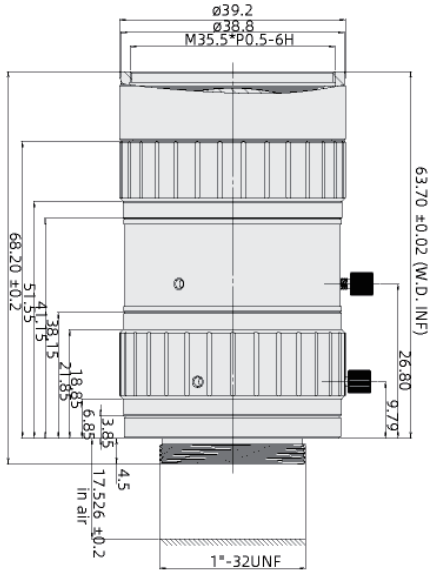

FLU120-F20

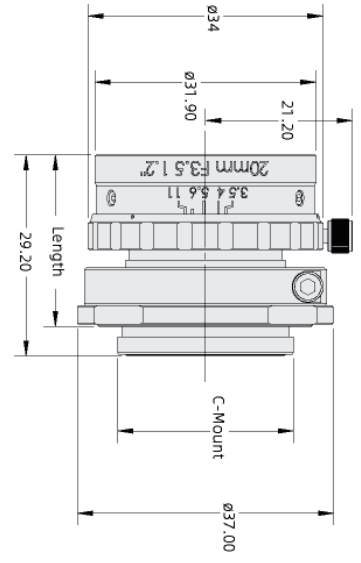

Subject to change without notice

FLU120-F25

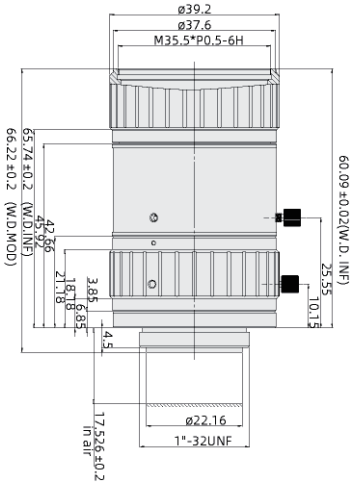

FLU12-F35

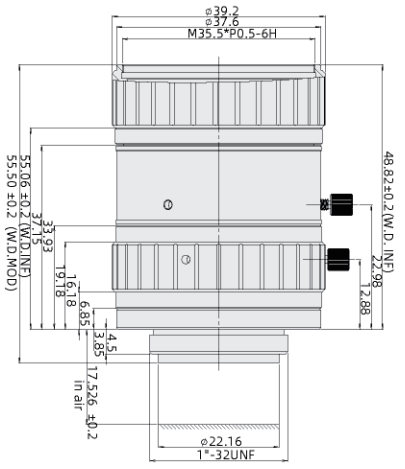

FLU120-F50

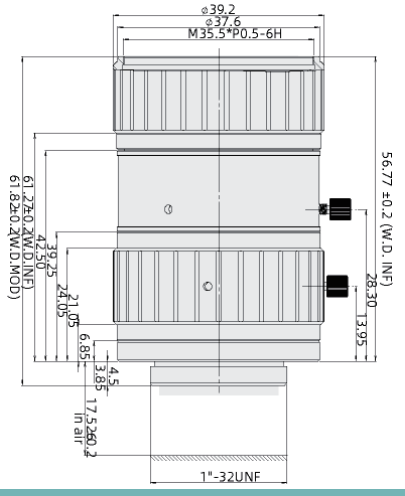

FLU120-F70

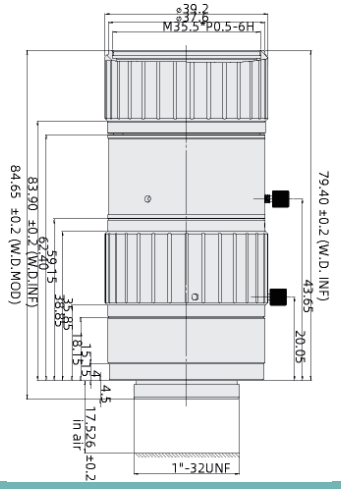

FLU120-F75

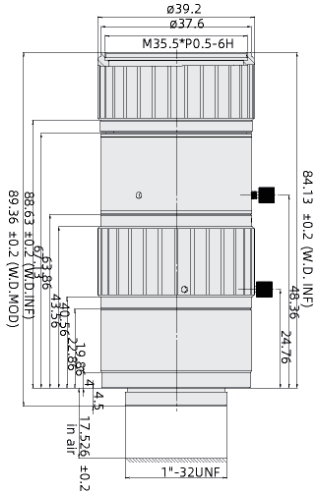

FLU120-F100

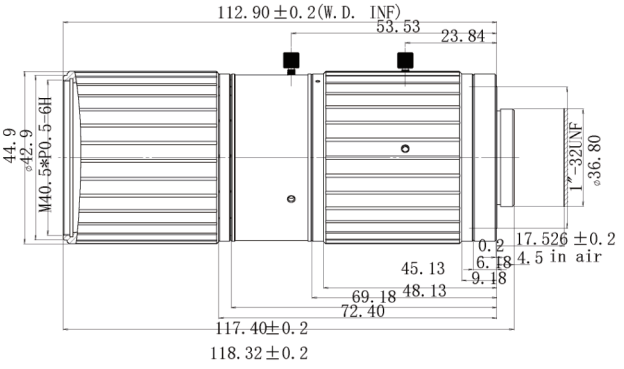

Telecentric Lenses

- Supports 25MP 1.1 inches
- Supports 5MP 2/3 inches



1.1" 25MP Telecentric Lens	Sensor Size (Φmm)	Mag (x)	WD (mm)	FOV (Φmm)	F/#	MTF30 (lp/mm)	Mount	External Adjustable Iris
TLU110-M050	18.0(1.1")	0.5	110±2	36.00	7.0	124	C	NO
TLU110-M080	18.4(1.1")	0.8	110±2	23.00	6.6	128	C	NO
TLU110-M100	18.4(1.1")	1.0	110±2	18.40	7-32	>105	C	YES
TLU110-M150	18.0(1.1")	1.5	110±2	12.00	10-32	>78	C	YES
TLU110-M200	18.0(1.1")	2.0	110±2	9.00	13.5-32	>60	C	YES
TLU110-M300	18.0(1.1")	3.0	110±2	6.00	20.1	>40	C	NO
TLU108-M400	18.4(1.1")	4.0	108±2	4.60	20.0	43	C	NO
TLU108-M600	18.4(1.1")	6.0	108±2	3.07	29.7	29	C	NO
TLU108-M800	18.4(1.1")	8.0	108±2	2.30	40.4	21	C	NO
TLU220-M050	18.0(1.1")	0.5	220±3	36.00	7.0	>140	C	NO
TLU220-M055	18.0(1.1")	0.55	220±3	32.73	10.1	>90	C	NO

2/3" 5MP Telecentric Lens	Sensor Size (Φmm)	Mag (x)	WD (mm)	FOV (Φmm)	F/#	MTF30 (lp/mm)	Mount	External Adjustable Iris
TLH065-M075	11.0(2/3")	0.75	65±1	14.67	10.6	75	C	NO
TLH065-M080	11.0(2/3")	0.8	65±1	13.75	10	75	C	NO
TLH065-M100	11.0(2/3")	1	65±1	11.00	11.1	74	C	NO
TLH065-M150	11.0(2/3")	1.5	65±1	7.33	12.5	65	C	NO
TLH065-M200	11.0(2/3")	2	65±1	5.50	13.2	60	C	NO
TLH065-M300	11.0(2/3")	3	65±1	3.67	15.7	40	C	NO
TLH065-M400	11.0(2/3")	4	65±1	2.75	17.9	45	C	NO
TLH065-M600	11.0(2/3")	6	65±1	1.83	24.6	35	C	NO
TLH065-M750	11.0(2/3")	7.5	65±1	1.47	32	27	C	NO
TLH065-M800	11.0(2/3")	8	65±1	1.38	31	75	C	NO
TLH110-M030	11.0(2/3")	0.3	110±2	36.67	5.6-32	>170	C	YES
TLH110-M040	11.0(2/3")	0.4	110±2	27.50	7-32	>140	C	YES
TLH110-M050	11.0(2/3")	0.5	110±2	22.00	7.0	>140	C	NO
TLH110-M400	11.0(2/3")	4	110±2	2.75	20	50	C	NO
TLH110-M600	11.0(2/3")	6	110±2	1.83	38.9	23	C	NO

Subject to change without notice

CREVIS

MEMO

(주) 크래비스

www.crevis.co.kr

경기도 용인시 기흥구 기곡로 29-4 (17099)
대표번호 : 031-899-4599
팩스번호 : 031-899-4509
E-mail : sales1@crevis.co.kr
영업 : 031-289-3324, 3325

29-4, Gigokro, Giheunggu, Yonginsi, Korea (17099)
TEL : +82-31-899-4599
FAX : +82-31-899-4509
E-mail : sales1@crevis.co.kr
Sales : +82-31-289-3324, 3325