2025

CREVIS

FnIO G - Series

Get Smart Things for Industrial Automation



www.crevis.co.kr

DeviceNet PROFIBUS CANopen MODBUS EtherCAT CC-Link IE Field PROFINET EtherNet/IP CC-Link CC-Link IE Field Basic ASHRAE BACnet CODESYS OPC UA

Network Adapter

GN/GL-9xxx
MODBUS TCP, EtherNet IP, PROFINET, EtherCAT,
CC-Link IE, CC-Link IE Field Basic,
PROFIBUS, MODBUS RS485, CC-Link,
DeviceNet, CANopen, BACnet, MODBUS RTU

PIO

GN/GL-9xxx
MODBUS
EtherCAT

Digital Input

GT-1xxx
- DC : 8, 16, 32 ch
- Diagnostic :
  In(Sink)+Out(Source)
- AC : 4 ch

Digital Output

GT-2xxx
- Sink : 8, 16, 32 ch
- Source : 8, 16, 32 ch
- Diagnostic : sink, source
- Relay

Various types of protocols
Over 10 protocols available

Wide range of modules
More than 90 different I/Os

Fast Internal Bus
<1ms (128 Bytes)

Operating Temp
-20 to 60℃ (UL)
-40 to 70℃

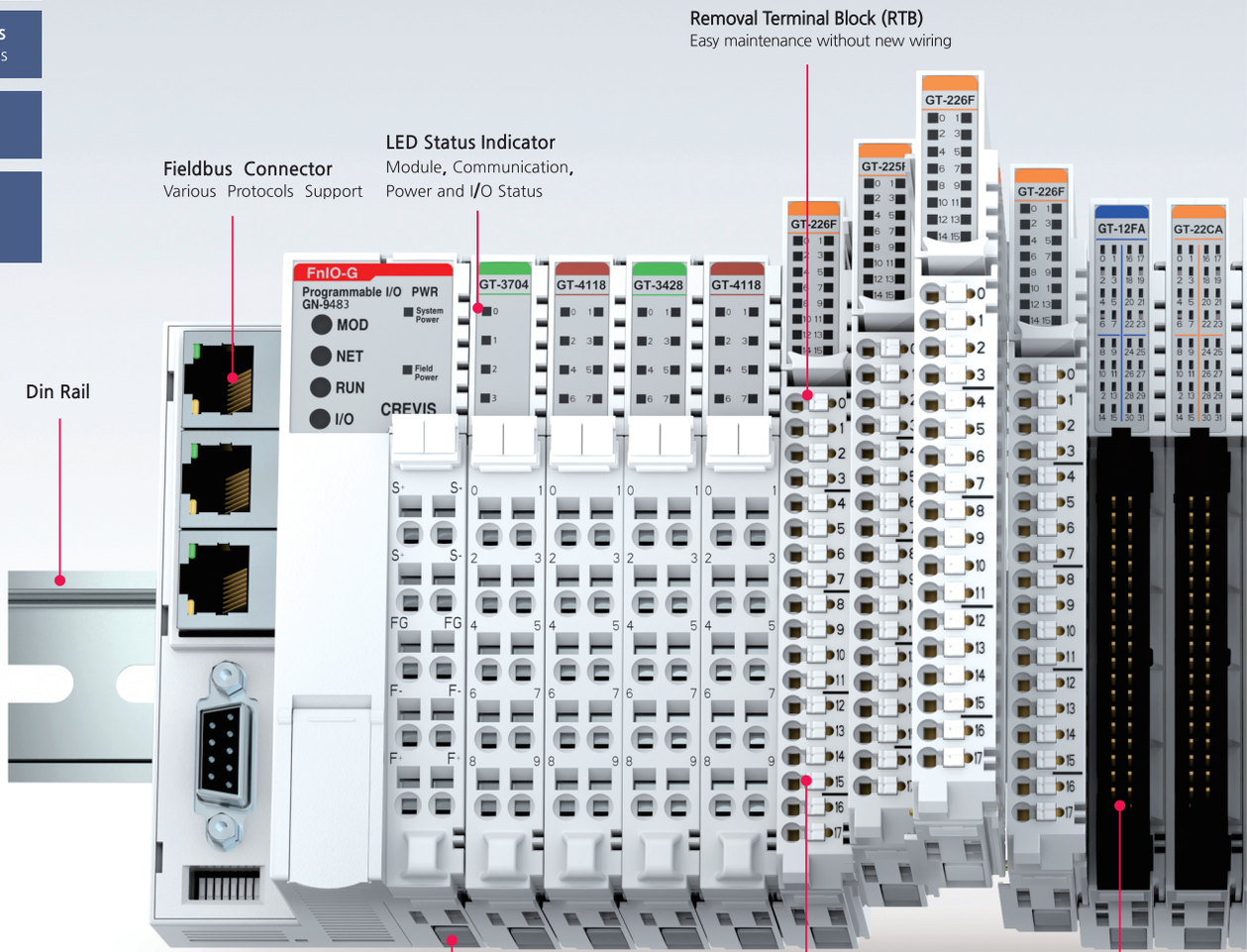

Din Rail Locker
Safe, and reliable configuration against the vibration and shock

Universal Type Digital Input Module
Wiring depending on NPN, PNP,
and COMMON on 10 RTB, 18 RTB

World's First : Compact Size I/O module for 32 Points

DeviceNet PROFIBUS CANopen MODBUS EtherCAT CC-Link IE Field PROFINET EtherNet/IP CC-Link CC-Link IE Field Basic ASHRAE BACnet CODESYS OPC UA

Analog Input

GT-3xxx
- Single Ended (Current) : 4, 8, 16 ch
- Single Ended (Voltage) : 4, 8, 16 ch
- Differential (Current/Voltage) : 4, 8 ch
- Temperature Module (RTD/T.C.) : 4, 8 ch
- Temp. Controller (RTD/T.C.) : 4 ch
- AC Measurement
- Load cell

Analog Output

GT-4xxx
- Single Ended (Current) : 4, 8 ch
- Single Ended (Voltage) : 4, 8, 16 ch

Special Module

GT-5xxx
- Encoder
- Serial Interface
- Pulse
- Stepper
- HART

Power Module

GT-7xxx
- Shield
- Common : 0, 24 Vdc
- Expansion
- Field Power Distribution
- Noise Filter

Easy Maintenance
User Friendly Design

Space-Saving
Compact Size & Expandable Modules

Easy Configuration
Software 'IO Guide Pro'

Environmental Compliance
Complying with RoHS3, China RoHS, REACH and WEEE

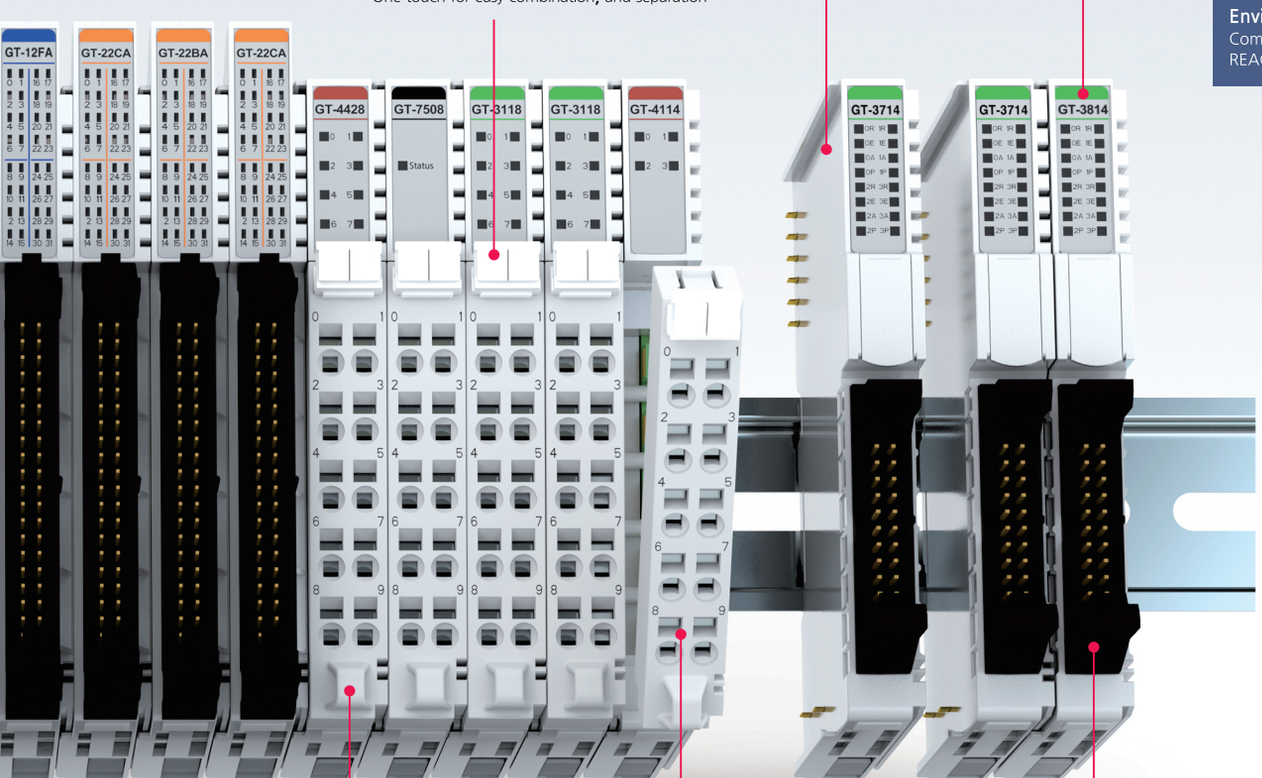

Slice type for IO expansion
Easy and firmly expansion for IO configuration

RTB unlock switch
One touch for easy combination, and separation

Window label color
Different colors by I/O Type

Cable Ring
wiring can be arranged, clean and fixed for the stable system

Screwless Connection System pin type RTB
Easy, and safe wiring system

16 Points digital module
(20P Connector / 18 RTB)

ROHS 2015 / 863 / EU
REACH EC NO. 190712006
CE
UL
FC
KIC
ISO 14001:2004
ISO 9001:2008

I/O Guide Pro

To help users' I/O configuration

Simple Software Tool for User Convenience

Simulation

Enable to review configuration without modules via I/O Guide Pro
Dimension, Power Consumption, Possibility of expansion

Manual and Project Viewer

Provide the product information as the manual
Enable to export the User-configured project files in Excel or PDF file formats



Parameter setting and View Address Map

Enable to change parameters of modules easily
Displaying input/output address map

BOOTP Server and Automatic Scan

IP setting and connecting communication online without a master
* Online - MODBUS protocol available

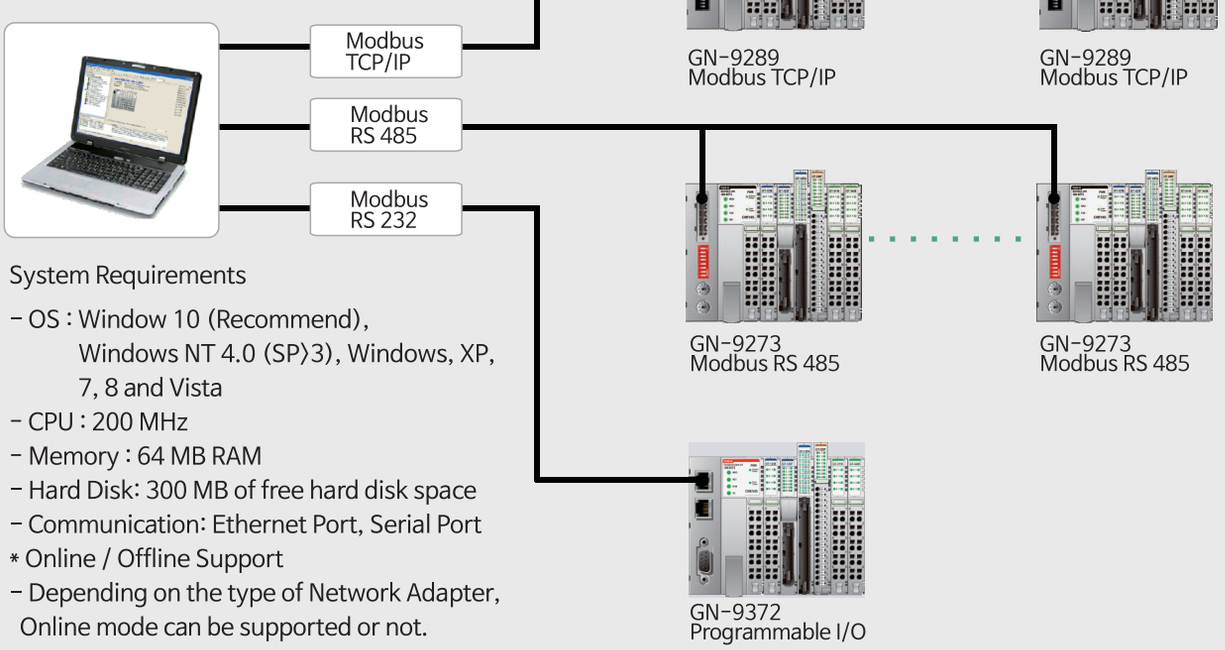

System Requirements

- OS : Window 10 (Recommend), Windows NT 4.0 (SP>3), Windows, XP, 7, 8 and Vista
- CPU : 200 MHz
- Memory : 64 MB RAM
- Hard Disk: 300 MB of free hard disk space
- Communication: Ethernet Port, Serial Port

* Online / Offline Support

- Depending on the type of Network Adapter, Online mode can be supported or not.

NEW

Programmable IO (Raspberry pi)

Programmable IO (CODESYS Version 3.5.17.3)	GL-9981-L (Linux Version)	GL-9981-C1 (CoDeSys Version)	GL-9981-C2 (CoDeSys Version)
PIO Type	Embadded Type Programmable IO		
Processor	Broadcom BCM2711, Quad core cortex-A72 (ARM v8) 64bit SoC @1.5GHz		
Intalled Version	Raspberry Pi OS GNU/Linux 11 (bullseye)		
RAM	LPDDR4 2GB		
eMMC Flash Memory	16GB		
Cpdesys Runtime * Only GL-9981-C	-	CODESYS Control for Raspberry Pi SL pre-installed & licensed. - Runtime Package 4.2.0.0 (raspberry, armhf) - Available from version CODESYS V3.5 SP17 Patch 1 or higher * Tested in CODESYS V3.5 SP17 Patch 3+ (64-bit) version (3.5.17.3)	CODESYS Control for Raspberry Pi MC SL pre-installed & licensed.
Ethernet Baudrate	100Mbps, Auto-negotiation, Full Duplex		
RTC (TBD)	Ratain Time 〈 15 day Battery charging time / Retain time 4 hours / 〈2 day 12 hours / 〈12 day 16 hours / 〈15 day		
Connector Type	RJ-45 Socket x 1pcs / USB 2.0 Port x 2pcs / Monitor Port x 1pcs		
System Power	Supply voltage : 24Vdc nominal (15~28.8Vdc)		
Field Power	Supply voltage : 24Vdc typical (Max. 28.8Vdc)		
Power Dissipation	225mA typical @ 24Vdc		
Dimensions	22.5mm x 109mm x 70mm		

NEW

36 RTB

Digital Input Module

DC	Channel	Type	Voltage	Signal Delay (OFF to ON/ ON to OFF)	Power Dissipation	Connector
GT-1C7A	32 (In 16 / Out16)	Combination DI(Source) / DO(Sink)	24 Vdc	In : 0.5ms / 0.5ms Out : 0.4ms(0.2ms@0.3A) / 0.4ms(0.4ms@0.3A)	50mA	36 RTB
GT-1C8A	32 (In 16 / Out16)	Combination DI(Source) / DO(Sink)	24 Vdc	In : 0.5ms / 0.5ms Out : 0.4ms(0.2ms@0.3A) / 0.4ms(0.4ms@0.3A)	50mA	36 RTB
GT-125A	32	Sink	24 Vdc	0.5ms / 0.5ms	50 mA	36 RTB
GT-126A	32	Source	24 Vdc	0.5ms / 0.5ms	50 mA	36 RTB

Digital Output Module

DC	Channel	Type	Voltage	Signal Delay (OFF to ON/ ON to OFF)	Power Dissipation	Connector
GT-225A	32	Sink	24 Vdc	0.3ms / 0.5ms	50 mA	36 RTB
GT-226A	32	Source	24 Vdc	0.3ms / 0.5ms	50 mA	36 RTB

* Wiring	IO Cable Max. 0.3mm^2 (AWG 22)

NEW

Programmable IO (EtherCAT/MODBUS)

Programmable IO (CODESYS Version 3.5.17.3)		GN-9481	GN-9482	GN-9483
Memory	Program Memory	512 Kbytes	16 Mbytes	
	Data Memory	96 Kbytes	16 Mbytes	
	Non Volatile Memory	4 Kbytes	32 Kbytes	
Program Languages / Run Time System / RTC		IEC 61131-3 (LD, IL, ST, FBD, SFC, CFC) / Multiple PLC Tasks / Retain Time : 15 days		
Protocol		EtherCAT Protocol / Ethernet Protocol (Modbus/TCP, Modbus/UDP), SNTP HTTP (Webvisualization, Web-Server), DHCP/BOOTP / Serial Protocol (Modbus RTU), MQTT, SQL, SNMP		
OPC Server (DA/UA) TFTP, Online Change, Breakpoint, Source Up/Download, File Transmit		Not supporting	Supporting	
Webvisualization		Not Supporting		Supporting
Process Time		1usec (90 Instructions)	7usec (90 Instructions)	
Max. Task / Max. Cycle Task / Max. Status Task		10		
Controller Type *(Master, Slave)		Modbus TCP/UDP, Modbus RTU *(Master/Slave) EtherCAT *(Slave)		
Max. Node / Max. IO Expansion / IO Data Size		Limited by EtherCAT / Ethernet specification / 63 Slots / Max 128 Byte each slot		
Baud Rate		Ethernet (10/100 Mbps) / EtherCAT (100 Mbps) / Modbus RTU (2400~115200 bps)		
Connector Type		3 x RJ-45		
System & Field Power / Power Dissipation / Current for IO Module		Supply voltage : 24Vdc (15~30Vdc) / 75mA typical @ 24Vdc / 1.5A @5Vdc		
Dimensions		54mm x 99mm x 70mm		

Programmable IO (MODBUS)

Programmable IO (CODESYS Version 3.5.17.3)		GN-9371	GN-9372	GN-9373
Memory	Program Memory	512 Kbytes	16 Mbytes	
	Data Memory	96 Kbytes	16 Mbytes	
	Non Volatile Memory	4 Kbytes	32 Kbytes	
Program Languages / Run Time System / RTC		IEC 61131-3 (LD, IL, ST, FBD, SFC, CFC) / Multiple PLC Tasks / Retain Time : 15 days		
Protocol		Ethernet Protocol (Modbus/TCP, Modbus/UDP), SNTP HTTP (Webvisualization, Web-Server), DHCP/BOOTP / Serial Protocol (Modbus RTU) / MQTT, SQL, SNMP		
OPC Server (DA/UA), TFTP, Online Change, Breakpoint, Source Up/Download, File Transmit		Not supporting	Supporting	
Webvisualization		Not Supporting		Supporting
Process Time		1usec (90 Instructions)	7usec (90 Instructions)	
Max. Task / Max. Cycle Task / Max. Status Task		10		
Controller Type *(Master, Slave)		Modbus TCP/UDP, Modbus RTU *(Master/Slave)		
Max. Node / Max. IO Expansion / IO Data Size		Limited by EtherCAT/Ethernet specification / 63 Slots (GN-937X), 10 Slots (GL-9971) / Max 128Byte each slot		
Baud Rate		Ethernet (10/100 Mbps) / Modbus RTU (2400~115200 bps)		
Connector Type		2 x RJ-45		
System Power		Supply voltage : 24Vdc nominal (GL-9971 :15 ~28.8 Vdc / GN-937x : 15 ~ 30 Vdc)		
Field Power		Supply voltage : 24Vdc typical (Max. 30Vdc)		
Power Dissipation / Current for I/O Module		110mA typical @ 24Vdc / 1.5A@5Vdc		
Dimensions		54mm x 99mm x 70mm		

Programmable I/O (MODBUS)

Programmable IO (CODESYS Version 3.5.17.3)		GL-9971	GL-9974	GL-9975
Type		Programmable IO (MODBUS)		
Memory	Program Memory	256 Kbytes	16 Mbytes	
	Data Memory	40 Kbytes	16 Mbytes	
	Non Volatile Memory	4 Kbytes	32 Kbytes	
Program Languages / Run Time System / RTC		IEC 61131-3 (LD, IL, ST, FBD, SFC) / Multiple PLC Tasks / Retain Time : 〈 15 day		
Protocol		Modbus/TCP, Modbus/UDP, SNTP, MQTT, HTTP (Web-Server), DHCP/BOOTP	Modbus/TCP, Modbus/UDP, SNTP, SNMP, MQTT, DHCP/BOOTP, HTTP (Webvisualization*, Web-Server), OPC-server	
OPC Server (DA/UA), TFTP, Online Change, Breakpoint, Source Up/Download, File Transmit		Not supporting	Supporting	
Webvisualization		Not Supporting		Supporting
Process Time		0.0270 usec	0.1440 usec	
Max. Task / Max. Cycle Task / Max. Status Task		10		
Controller Type *(Master, Slave)		Modbus TCP * (Master/Slave)		
Max. Node / Max. IO Expansion / IO Data Size		10 Slots	63 Slots	
Baud Rate		10/100Mbps, Auto-negotiation, Full Duplex		
Connector Type		2 x RJ-45		
System Power		Supply voltage: 24Vdc nominal, Class 2		
Field Power		Supply voltage: 24Vdc typical (Max. 30Vdc)		
Power Dissipation / Current for IO Module		60mA typical @24Vdc	70mA typical @24Vdc	
Dimensions		22mm X 109mm X 70mm		

Programmable IO (CODESYS Version 3.5.17.3)		GL-9972	GL-9973
Type		Programmable I/O (MODBUS)	
Memory	Program Memory	16 Mbytes	
	Data Memory	16 Mbytes	
	Non Volatile Memory	32 Kbytes	
Program Languages / Run Time System / RTC		IEC 61131-3 (LD, IL, ST, FBD, SFC) / Multiple PLC Tasks / Retain Time : 〈 15 day	
Protocol		Modbus/TCP, Modbus/UDP, SNTP, SNMP, MQTT, DHCP/BOOTP, HTTP (Webvisualization, Web-Server), OPC-server Modbus RTU Baud Rate : 2400~115200 bps	
OPC Server (DA/UA), TFTP, Online Change, Breakpoint, Source Up/Download, File Transmit		Supporting	
Webvisualization		Not supporting	Supporting
Process Time		0.1440 usec	
Max. Task / Max. Cycle Task / Max. Status Task		10	
Controller Type *(Master, Slave)		Modbus TCP * (Master/Slave)	
Max. Node / Max. IO Expansion / IO Data Size		63 Slots	
Baud Rate		10/100Mbps, Auto-negotiation, Full Duplex for Ethernet Prot Modbus RTU Baud Rate : 2400~115200 bps for Serial Port (Default: 115200 bps)	
Connector Type		2 x RJ-45 (Ethernet Port x 1 / Seial Port x 1)	
System Power		Supply voltage: 24Vdc nominal, Class 2	
Field Power		Supply voltage: 24Vdc typical (Max. 30Vdc)	
Power Dissipation / Current for I/O Module		50mA typical @24Vdc	
Dimensions		22mm X 109mm X 70mm	

Network Adapter

Network Adapter	GN-9211, GN-9212	GN-9222	GN-9261	GN-9273	GN-9231	GN-9284
Protocol	DeviceNet	PROFIBUS	CANopen	MODBUS RS485	CC-Link	CC-Link IE Field Basic
Max. Node	64 Nodes	125 Nodes	99 Nodes		42 Nodes	64 Nodes
Max. IO Expansion	32 Slots (GN-9211) 63 Slots (GN-9212)	63 Slots				32 Slots
IO Data Size	Max 128 bytes each slot	Input : 244 bytes Output : 244 bytes	Input : 252 bytes Output : 252 bytes	Max 128 bytes each slot	System area : 16 Point RX/RY : 112 points (4 Station occupied) RWr/RWw : 16 points (4 Station occupied)	RX/RY : 32 bytes each (4 Station occupied) RWr/RWw : 256 bytes each (4 Station occupied)
Baud Rate	125Kbps (Max. 500m) 250Kbps (Max. 250m) 500Kbps (Max. 100m)	9.6K(1.2Km) ~ 12Mbps(100m)	10, 20, 50, 100, 125, 250, 500, 800, 1000 Kbps (default 1000Kbps)	1200, 2400, 4800, 9600, 19200, 38400, 57600, 115200bps	156/625/2500/5000/ 10000 Kbps	10/100 Mbps, Full duplex
Connector Type	5 Pin Open-Style	9 Pin D-Sub	5 Pin Open-Style			2 x RJ-45
Power Dissipation	70mA @ 24Vdc	100mA @ 24Vdc	70mA @ 24Vdc			
Protection	Min. 1.5A					
Current for IO Module	1.5A @ 5Vdc					
System/ Field Power	24Vdc nominal (15~30Vdc) / 24Vdc typical (Max. 30Vdc) * Field Power Range is different depending on IO Module series. Refer to IO Module's Specification					
Dimensions	54mm x 99mm x 70mm					

Network Adapter	GN-9285	GN-9386	GN-9287	GN-9587	GN-9289	GN-9251
Protocol	CC-Link IE	EtherCAT (ID Type)	PROFINET, Modbus RTU	PROFINET, Modbus RTU, DCP-Hello	MODBUS TCP, Ethernet IP	BACnet/IP B-ASC
Max. Node	120 Nodes	65,535 Nodes	Limited by Profinet Spec.		Limited by Ethernet Spec.	
Max. IO Expansion	63 Slots		32 Slots		63 Slots	32 Slots
IO Data Size	Max 128 bytes each slot		Max 1440 bytes	Max 1024 bytes	Max 128 bytes each slot	Object Size : Max. 256 objects
Baud Rate	1 Gbps, Full duplex	100 Mbps	100 Mbps, Full duplex		10/100 Mbps, Full duplex	
Connector Type	2 x RJ-45					
Power Dissipation	140mA @ 24Vdc	70mA @ 24Vdc		80mA @ 24Vdc	70mA @ 24Vdc	
Protection	Min. 1.5A					
Current for IO Module	1.5A @ 5Vdc					
System/ Field Power	24Vdc nominal (15~30Vdc) / 24Vdc typical (Max. 30Vdc) * Field Power Range is different depending on IO Module series. Refer to IO Module's Specification					
Dimensions	54mm x 99mm x 70mm					

* **Caution** - System Power and Field Power must be separated.
* **Note** - Product specifications, terms and offerings are subject to change without notice.

Network Adapter

Network Adapter	GL-9012	GL-9031	GL-9131	GL-9132	GL-9073
Protocol	DeviceNet	CC-LINK		CC-LINK Ver 2	MODBUS RTU
Max. Node	64 Nodes	42 Nodes			99 Nodes
Max. IO Expansion	10 Slots	12 Slots		32 Slots	16 Slots
IO Data Size	Max Input 36 bytes / Max Output 36 bytes	System area : 16 Point RX/RY : 112 points (4 Station occupied) RWr/RWw : 16 points (4 Station occupied)		According to CC-Link version 2 specification	Max 256 bytes
Baud Rate	125Kbps (Max. 500m) 250Kbps (Max. 250m) 500Kbps (Max. 100m)	156/625/2500 /5000/10000Kbps		156/625/2500 /5000/10000Kbps	2400, 4800, 9600, 19200, 38400, 57600, 115200 bps
Connector Type	5 Pin Open-Style				2 x RJ-45
Power Dissipation	20mA @ 24Vdc	35mA typical @ 24Vdc	60mA typical @ 24Vdc	70mA typical @ 24Vdc	75mA typical @ 24Vdc
Protection	Reverse polarity protection				
Current for IO Module	1A @ 5Vdc				
System/ Field Power	24Vdc nominal (15~28.8Vdc) / 24Vdc typical (Max. 28.8Vdc) *Field Power Range is different depending on IO Module series. Refer to IO Module's Specification				
Dimensions	22mm x 109mm x 70mm				

Network Adapter	GL-9087	GL-9089	GL-9084	GL-9086
Protocol	PROFINET	MODBUS TCP, Ethernet IP	CC-Link IE Field Basic	EhterCAT
Max. Node	Limited by Ethernet Spec.		64 Nodes	65,535 Nodes
Max. IO Expansion	10 Slots	16 Slots		
IO Data Size	Max 128 bytes	Max 256 bytes		
Baud Rate	100Mbps, Full duplex	10/100Mbps, Full duplex		10/100Mbps
Connector Type	2 x RJ-45			
Power Dissipation	55mA typical @ 24Vdc	75mA typical @ 24Vdc	60mA typical @ 24Vdc	40mA typical @ 24Vdc
Protection	Reverse polarity protection			
Current for IO Module	1A @ 5Vdc			
System/ Field Power	24Vdc nominal (15~28.8Vdc) / 24Vdc typical (Max. 28.8Vdc) *Field Power Range is different depending on IO Module series. Refer to IO Module's Specification			
Dimensions	22mm x 109mm x 70mm			

Remote I/O

Digital Input

DC	Channel	Type	Voltage	Signal Delay (OFF to ON/ ON to OFF)	Power Dissipation	Connector
GT-1138	8	Universal	5 Vdc	0.3ms	35 mA	10 RTB
GT-1238	8	Universal	24 Vdc	0.3ms/ 0.3ms	35 mA	10 RTB
GT-123F	16			0.3ms/ 0.3ms	50 mA	20P Connector
GT-12DF	16			0.3ms/ 0.3ms	50 mA	18 RTB
GT-12FA	32			0.2ms/ 0.2ms	55 mA	40P Connector
GT-121F	16	Sink	24 Vdc	0.3ms	50 mA	20P Connector
GT-122F	16	Source	24 Vdc	0.3ms	50 mA	20P Connector
GT-1258	8	Diagnostics (Short, Open)	24 Vdc	(0) : I≤1.5mA (1) : I≥4.8mA	50 mA	18 RTB
GT-1278	8	Sink	24 Vdc/6mA	0.3ms	40 mA	18 RTB
GT-1358	8		24 Vdc	0.3ms	35 mA	18 RTB
GT-1368	8	Source	24 Vdc	0.15ms	40 mA	18 RTB
GT-1428	In (8) / Out (8)	In (Sink) / Out (Source) - Diagnostic	24 Vdc	In: 0.3ms / 0.3ms Out: 0.1ms/ 0.35ms	55 mA	18 RTB
GT-15DF	16	Universal	12 Vdc	0.3ms	50 mA	18 RTB
GT-1658	8	Proximity Sensor	8.2 Vdc	(0) : I≤1.2mA (1) : I≥2.1mA	50 mA	18 RTB
GT-1B7F	In (8) / Out (8)	Selectable DI (Sink) / DO (Source)	24 Vdc	In: 0.4ms / 0.5ms Out: 0.3ms/ 0.5ms	60 mA	18 RTB
GT-1B8F	In (8) / Out (8)	Selectable DI (Source) / DO (Sink)	24 Vdc	In: 0.3ms / 0.5ms Out: 0.3ms/ 0.5ms	60 mA	18 RTB
GT-1C18	8	Combiation DI (Sink) / DO (Source)	5 Vdc	In: 0.3ms / 0.3ms Out: 0.3ms/ 0.3ms	45 mA	18 RTB
AC	Channel	Type	Voltage	Signal Delay (OFF to ON/ ON to OFF)	Power Dissipation	Connector
GT-1804	4	AC Input Terminal	120 Vac	30ms/ 130ms	30 mA	10 RTB
GT-1904	4		240 Vac	30ms/ 140ms	30 mA	10 RTB

Digital Output

Sink	Channel	Type	Voltage	Signal Delay (OFF to ON/ ON to OFF)	Power Dissipation	Connector
GT-221F	16	Sink	24 Vdc	0.5ms/ 0.5ms	50 mA	20P Connector
GT-225F	16		24 Vdc	0.3ms/ 0.5ms	50 mA	18 RTB
GT-22BA	32		24 Vdc/0.3A	0.5ms	65 mA	40P Connector
GT-2318	8		24 Vdc	0.3ms/ 0.3ms	45 mA	10 RTB
GT-2358	8	Multi-Com	24 Vdc/0.5A	0.3ms	50 mA	18 RTB
GT-2418	8	Sink - Diagnostic	24 Vdc	0.3ms/ 0.3ms	50 mA	18 RTB
GT-2618	8	Sink	24 Vdc	0.3ms/ 0.3ms	50 mA	10 RTB
Source	Channel	Type	Voltage	Signal Delay (OFF to ON/ ON to OFF)	Power Dissipation	Connector
GT-222F	16	Source	24 Vdc	0.3ms/ 0.3ms	50 mA	20P Connector
GT-224F	16		24 Vdc/0.3A	0.6ms	50 mA	20P Connector
GT-226F	16		24 Vdc	0.3ms/ 0.3ms	50 mA	18 RTB
GT-22CA	32		24 Vdc/0.3A	0.5ms	65 mA	40P Connector
GT-2328	8		24 Vdc	0.3ms/ 0.3ms	40 mA	10 RTB
GT-2368	8	Multi-Com	24 Vdc/0.5A	0.5ms	50 mA	18 RTB
GT-2428	8	Source - Diagnostic	24 Vdc	0.5ms/ 0.5ms	35 mA	18 RTB
GT-2628	8	Source	24 Vdc	0.3ms/ 0.3ms	45 mA	10 RTB

Relay	Channel	Type	Voltage	Signal Delay (OFF to ON/ ON to OFF)	Power Dissipation	Connector
GT-2734	4	MOS Relay (Solid State)	240 Vac/240 Vdc	0.6ms/ 3ms	80 mA	10 RTB
GT-2738	8			0.5ms/ 2.5ms	130 mA	18 RTB
GT-2744	4	Relay Output (Form A, SPST)	0~32 Vdc/48 Vdc/ 110 Vdc/240 Vac	5ms/ 8 ~ 15ms	35 mA	10 RTB
GT-2764	4	MOS Relay (Solid State)	24 Vac / 24 Vdc	1ms/ 3 ~ 3.5ms	80 mA	10 RTB
GT-2768	8			0.5ms/ 3ms	130 mA	18 RTB
GT-2784	4		110 Vac/110 Vdc	1 ~ 1.5ms/ 3ms	80 mA	10 RTB
GT-2788	8			1ms/ 3.5 ms	130 mA	18 RTB

Remote I/O

Analog Input						
LoadCell	Channel	Type	Range	Resolution	Power Dissipation	Connector
GT-3002	2	Strain Gauge	-150~150 mV	24 Bits	25 mA	18 RTB
GT-3102	2		-150~150mV (0.1g/Kg/Ton)	24 Bits	25 mA	18 RTB
Single Ended	Channel	Type	Range	Resolution	Power Dissipation	Connector
GT-3114	4	Current	0~20, 4~20 mA	12 Bits	25 mA	10 RTB
GT-3154	4			16 Bits	25 mA	10 RTB
GT-3118	8			12 Bits	30 mA	10 RTB
GT-3158	8			16 Bits	30 mA	10 RTB
GT-311F	16			12 Bits	30 mA	20P Connector
GT-315F	16			16 Bits	30 mA	20P Connector
GT-317F	16			12 Bits	200 mA	18 RTB
GT-319F	16			16 Bits	200 mA	18 RTB
GT-3258	8	Current	4~20mA, NAMUR NE43	16 Bits	250 mA	18 RTB
GT-3424	4	Voltage	0~10, 0~5, 1~5Vdc	12 Bits	25 mA	10 RTB
GT-3464	4			16 Bits	25 mA	10 RTB
GT-3428	8			12 Bits	30 mA	10 RTB
GT-3468	8			16 Bits	30 mA	10 RTB
GT-342F	16			12 Bits	30 mA	20P Connector
GT-346F	16			16 Bits	30 mA	20P Connector
GT-347F	16			12 Bits	210 mA	18 RTB
GT-349F	16			16 Bits	210 mA	18 RTB
GT-3C18	C(4) V(4)	Current Voltage	Voltage Input 0~10Vdc, 0~5Vdc, 1~5Vdc, Current Input 0~20mA, 0~20mA	12 Bits	30 mA	18RTB
GT-3C38	C(4) V(4)	Current Voltage	Voltage Input 0~10Vdc, 0~5Vdc, 1~5Vdc, Current Input 0~20mA, 0~20mA	16 Bits	30 mA	18RTB
Differential	Channel	Type	Range	Resolution	Power Dissipation	Connector
GT-3914	4	Current	0~20, 4~20, -20~20 mA	12 Bits	30 mA	10 RTB
GT-3934	4			16 Bits	30 mA	10 RTB
GT-3918	8			12 Bits	200 mA	18 RTB
GT-3938	8			16 Bits	200 mA	18 RTB
GT-3924	4	Voltage	0~5, 0~10, -5~5, -10~10 Vdc	12 Bits	30 mA	10 RTB
GT-3944	4			16 Bits	30 mA	10 RTB
GT-3928	8			12 Bits	200 mA	18 RTB
GT-3948	8			16 Bits	200 mA	18 RTB
GT-3958	8	Current	-30~30 mA	12 Bits	250 mA	18 RTB
GT-3978	8	Current	-30~30 mA	16 Bits	250 mA	18 RTB
Differential / Single Ended	Channel	Type	Range	Resolution	Power Dissipation	Connector
GT-34B4	4	Voltage ch-to-ch isolation	0~5, 0~10, -5~5, -10~10 Vdc	16 Bits	35 mA	18 RTB
GT-34B8	8	Voltage ch-to-ch isolation	0~5, 0~10, -5~5, -10~10 Vdc	16 Bits	40 mA	18 RTB
Temperature	Channel	Type	Sensor Type	Accuracy	Power Dissipation	Connector
GT-3704	4	RTD	PT50, PT100, PT200, PT500, PT1000, JPT50, JPT100, JPT200, JPT500, JPT1000, NI100, NI120, NI200, NI500, NI1000, NI1000LG	±0.1% @25℃ ±0.3% @-40~70℃	130 mA	10 RTB
GT-3708	8				130 mA	20P Connector
GT-3744	4	RTD	PT50, PT100, PT200, PT500, PT1000, JPT50, JPT100, JPT200, JPT500, JPT1000, NI100, NI120, NI200, NI500, NI1000, NI1000LG, Cu10, Cu100	±0.3% @25℃ ±0.5% @-40~70℃	120 mA	18 RTB
GT-3758	8	NTC	NTC 10K	±1℃ @ 25℃ ±2℃ @ -40℃~70℃	105 mA	18 RTB

* UL Listed products (except GT-3714, GT-3734, GT-3814, GT-3834, GT-3901)

Remote I/O

Analog Input						
Temperature	Channel	Type	Sensor Type	Accuracy	Power Dissipation	Connector
GT-3708	8	RTD	PT50, PT100, PT200, PT500, PT1000, JPT50, JPT100, JPT200, JPT500, JPT1000, NI100, NI120, NI200, NI500, NI1000, NI1000LG	±0.1% @25℃ ±0.3% @-40~70℃	130 mA	20P Connector
GT-3778	8	RTD Economic Type	PT50, PT100, PT200, PT500, PT1000, JPT50, JPT100, JPT200, JPT500, JPT1000, NI100, NI120, NI200, NI500, NI1000, NI1000LG		60 mA	18 RTB
GT-3788	8	RTD	PT50, PT100, PT200, PT500, PT1000, JPT50, JPT100, JPT200, JPT500, JPT1000, NI100, NI120, NI200, NI500, NI1000, NI1000LG, Cu10, Cu100	±0.3% @25℃ ±0.5% @-40~70℃	120 mA	18 RTB
GT-3878	8	TC Economic Type	Type K/J/T/B/R/S/E/N/L/U/C/D, 10uV/1uV/2uV	±0.3% @25℃ ±0.5% @-40~70℃	250 mA	18 RTB
GT-3888	8	TC	Type K/J/T/B/R/S/E/N/L/U/C/D, 10uV/1uV/2uV	±0.3% @25℃ ±0.5% @-40~70℃	140 mA	18 RTB
GT-3804	4	T.C. (Thermocouple)	Type K/J/T/B/R/S/E/N/L/U/C/D, 10uV/1uV/2uV	±0.1% @25℃ ±0.3% @-40~70℃	120 mA	10 RTB
GT-3808	8				120 mA	20P Connector
Temp. Control	Channel	Type	Sensor Type	Accuracy	Power Dissipation	Connector
GT-3714	4	Temperature Controller (RTD)	PT 50, PT 100, JPT 100, NI 100, NI 120, CU 10	±0.1% @25℃	50 mA	20P Connector
GT-3734	4				50 mA	20P Connector
GT-3814	4	Temperature Controller (Thermocouple)	Type K/J/T/B/R/S/E/N/L/U/C/D	±0.1% @25℃ ±0.3% @-20~50℃	50 mA	20P Connector
GT-3834	4				50 mA	20P Connector
AC Measurement	Channel	Type	Range	Resolution	Power Dissipation	Connector
GT-3901	1	AC Measurement	VLN = 288VAC, VLL = 500VAC	24 Bits	125 mA	10 RTB
GT-3911	1		VLN = 288VAC, VLL = 500VAC / 5A	24 Bits	110 mA	10 RTB
Combi - AI/AO	Channel	Type	Range	Resolution	Power Dissipation	Connector
GT-3C74	4	Voltage	Voltage Input, 0~10Vdc, 0~5Vdc, 1~5Vdc, Voltage Output, 0~10Vdc	12 Bits	30 mA	18 RTB
GT-3C78	8			12 Bits	30 mA	18 RTB
GT-3C94	4			12 Bits	30 mA	18 RTB
GT-3C98	8			16 Bits	30 mA	18 RTB

Analog Output						
Single Ended	Channel	Type	Range	Resolution	Power Dissipation	Connector
GT-4114	4	Current	0~20 mA	12 Bits	30 mA	10 RTB
GT-4154	4			16 Bits	30 mA	10 RTB
GT-4118	8			12 Bits	30 mA	10 RTB
GT-4158	8			16 Bits	30 mA	10 RTB
GT-4214	4		4~20 mA	12 Bits	30 mA	10 RTB
GT-4254	4			16 Bits	30 mA	10 RTB
GT-4218	8			12 Bits	30 mA	10 RTB
GT-4258	8			16 Bits	30 mA	10 RTB
Single Ended	Channel	Load Resistance	Range	Resolution	Power Dissipation	Connector
GT-4314	4	550 Ω	4~20mA	12 Bits	30 mA	18 RTB
GT-4334	4	750 Ω		16 Bits	30 mA	18 RTB
GT-4354	4	550 Ω		16 Bits	30 mA	18 RTB
GT-4374	4	750 Ω		16 Bits	30 mA	18 RTB
Single Ended	Channel	Type	Range	Resolution	Power Dissipation	Connector
GT-4424	4	Voltage	0~10 Vdc	12 Bits	30 mA	10 RTB
GT-4464	4			16 Bits	30 mA	10 RTB
GT-4428	8			12 Bits	30 mA	10 RTB
GT-4468	8			16 Bits	30 mA	10 RTB
GT-442F	16			12 Bits	30 mA	20P Connector
GT-446F	16			16 Bits	30 mA	20P Connector
GT-447F	16			12 Bits	30 mA	18 RTB
GT-449F	16			16 Bits	30 mA	18 RTB
GT-44B4	4	Voltage Isolation Block	0~10 Vdc, 0~5Vdc(2ch Isolation Block)	16 Bits	35 mA	18 RTB
GT-44B8	8	Voltage Isolation Block		16 Bits	40 mA	18 RTB
GT-4524	4	Voltage	-10~10 Vdc	12 Bits	30 mA	10 RTB
GT-4564	4	Voltage		16 Bits	30 mA	10 RTB
GT-4664	4	Voltage	0~10 Vdc, 0~5 Vdc, 1~5 Vdc(Full Range)	16 Bits	30 mA	10 RTB
GT-4668	8	Voltage		16 Bits	35 mA	10 RTB
GT-4C18	8	Combination Voltage / Current	0~10 Vdc, 0~20 mA	12 Bits	30 mA	18 RTB
GT-4C38	8			16 Bits	30 mA	18 RTB

Remote I/O

Special Module						
Modbus RTU	Channel	Type	Range	Resolution	Power Dissipation	Connector
GT-5001	1	Loadcell(1) / DI(4) / DO(4) / Modbus RTU(1)	-150mV ~ +150mV	24bit, 32bit presentation	50 mA	18 RTB
GT-5002	2	AI(4) / DI(4) / DO(4) / Modbus RTU(1)	0~10, 0~5, 1~5 Vdc	16 bits	55 mA	18 RTB
Encoder	Channel	Type	Voltage	Frequency (Encoder / Counting)	Power Dissipation	Connector
GT-5102	2	High Speed Counter	5 Vdc	0~750 kHz / 0~300 kHz	70 mA	10 RTB
GT-5112	2		24 Vdc	0~750 kHz / 0~300 kHz	65 mA	10 RTB
GT-5114	4		24 Vdc	0~750 kHz / 0~100 kHz	70 mA	10 RTB
GT-5122	2		5~24 Vdc	0~750kHz / 0~500 kHz	120 mA	18 RTB
GT-5132	2		24 Vdc	0~750 kHz / 0~300 kHz	65 mA	10 RTB
GT-5142	2		5~24 Vdc	0~750 kHz / 0~500 kHz (Gate Function Mode)	120 mA	18 RTB
Serial Interface	Channel	Type	Voltage	Signal Delay	Power Dissipation	Connector
GT-5211	1	RS-232, RTS/CTS	-18 ~ 18 V	TxD, RxD, Full Duplex	85 mA	10 RTB
GT-5212	2	RS-232			85 mA	10 RTB
GT-5221	1	RS-422	-		85 mA	10 RTB
GT-5231	1	RS-485		TxD, RxD, Half Duplex	85 mA	10 RTB
GT-5232	2	RS-485			85 mA	10 RTB
GT-5352	2	Synchronous		-	60 mA	10 RTB
Pulse	Channel	Type	Voltage	Frequency	Power Dissipation	Connector
GT-5422	2	PWM, Push-pull	24 Vdc	1~5 kHz	75 mA	18 RTB
GT-5424	4		24 Vdc		80 mA	18 RTB
GT-5442	2		24 Vdc		75 mA	18 RTB
GT-5444	4		24 Vdc		75 mA	18 RTB
GT-5642	2	Pulse Output, Push-pull	24 Vdc	1~300 kHz	75 mA	18 RTB
GT-5652	2	Differential Output	5 Vdc	1~500 kHz	75 mA	18 RTB
Stepper	Channel	Type	Voltage	Mode	Power Dissipation	Connector
GT-5521	1	2-Phase Bipolar Motor (Max. 16 microstepping)	24 Vdc	Instant Command, Position Table, Position (absolute/relative), Set Point Change, etc.	100 mA	10 RTB
HART	Channel	Type	Input Range	Resolution	Power Dissipation	Connector
GT-5914	4	HART Revision 5	4 ~20 mA	16 Bits	30 mA	18 RTB
IO Link	Channel	Type	Voltage	Transmission rate	Power Dissipation	Connector
GT-5904	2	IO Link V1.1 Master	24 Vdc	4.8 Kbps(COM1), 38.4 Kbps(COM2) 230.4 Kbps(COM3)	85 mA	18 RTB

Power Module				
Power	Type	Voltage	Power Dissipation	Connector
GT-7408	Shield	24 Vdc	30 mA	10 RTB
GT-7508	Common for 0 Vdc		30 mA	10 RTB
GT-7511	Expansion		20 mA	10 RTB
GT-7518	Common for 24 Vdc		30 mA	10 RTB
GT-7588	Common for 0Vdc, 24 Vdc		30 mA	10 RTB
GT-7641	Field Power Distribution		30 mA	10 RTB
Filter	Type	Voltage	Power Dissipation	Connector
GT-7151	None ID Type	24 Vdc	Max. 120mA @ 5Vdc	10 RTB
GT-7851	ID Type	24 Vdc	Max. 120mA @ 5Vdc	10 RTB

Dimension

Network Adapter

Model : GN-9212, GN-9222, GN-9251, GN-9261, GN-9273, GN-9231, GN-9284, GN-9285, GN-9386, GN-9287, GN-9587, GN-9289, GN-9371, GN-9372, GN-9373, GN-9481, GN-9482, GN-9483

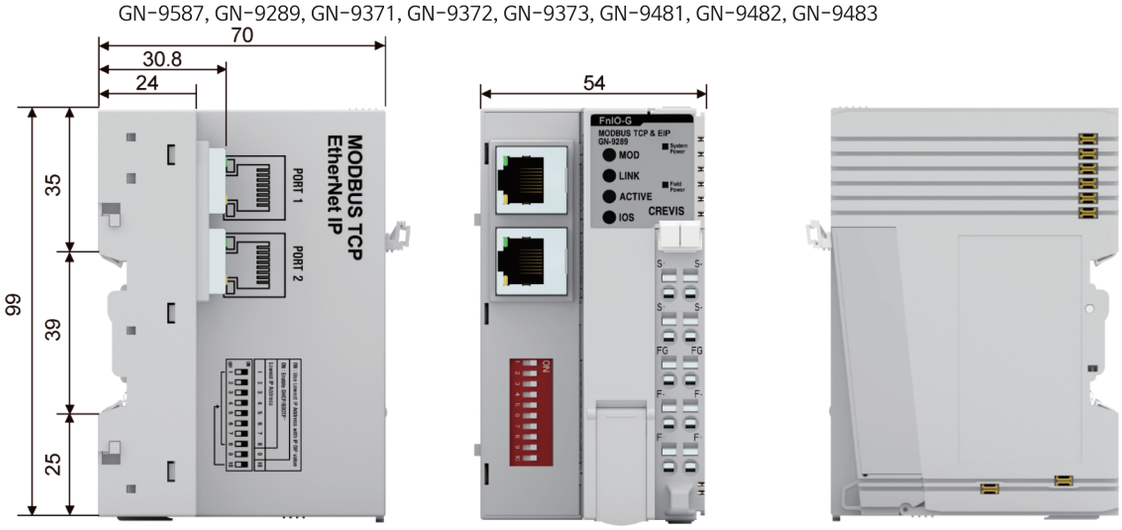

Model : GL-9971, GL-9089, GL-9087, GL-9084, GL-9073, GL-9086

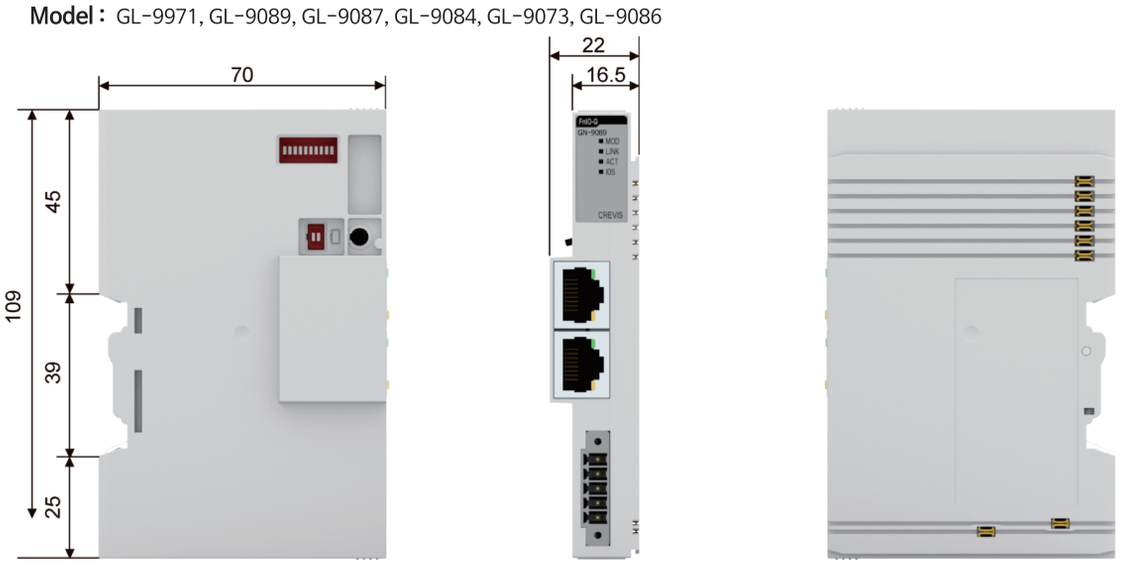

I/O

10-Hole Removable Terminal Block (10 RTB)

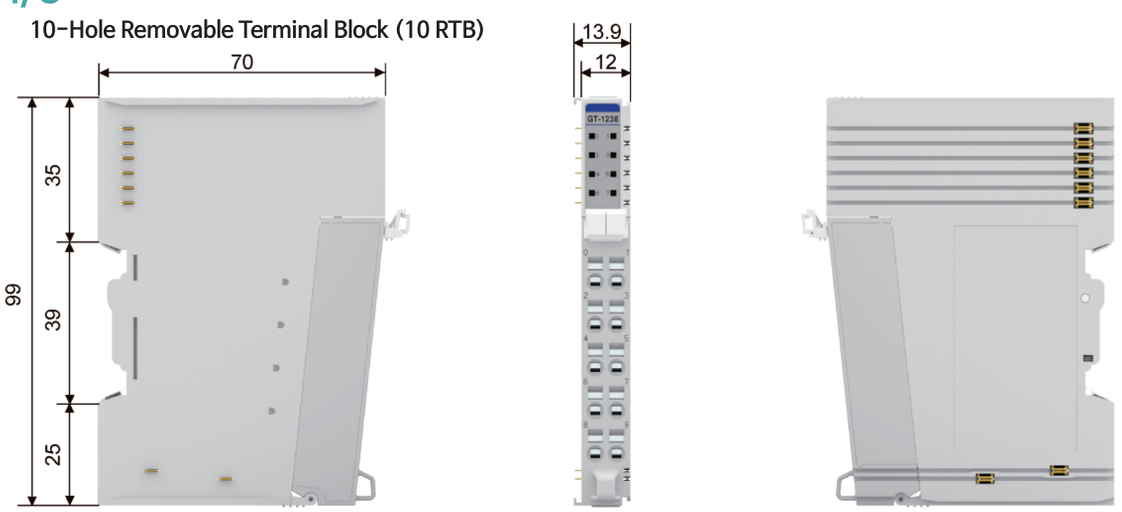

18-Hole Removable Terminal Block (18 RTB)

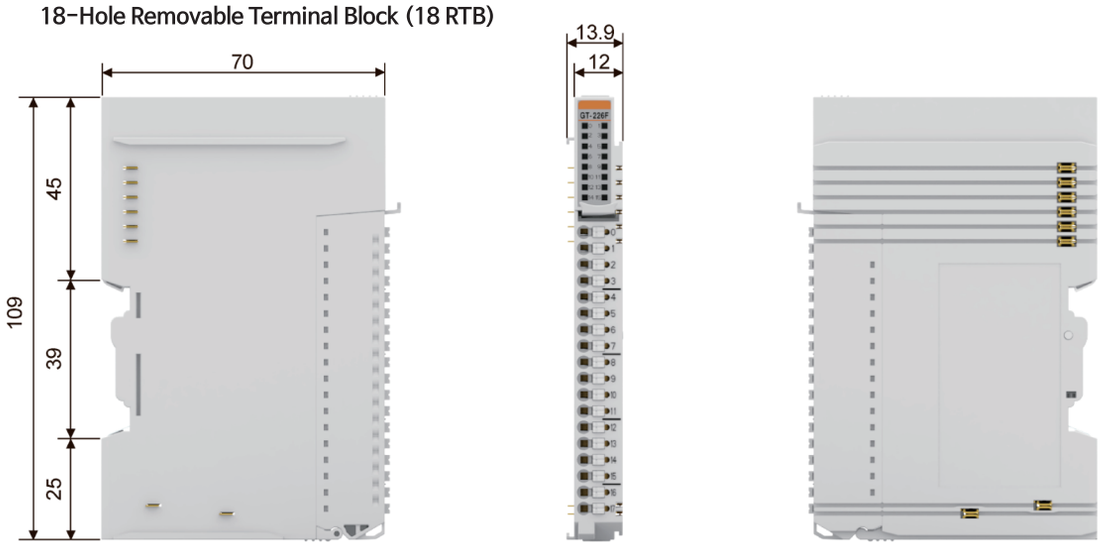

20-PIN Connector

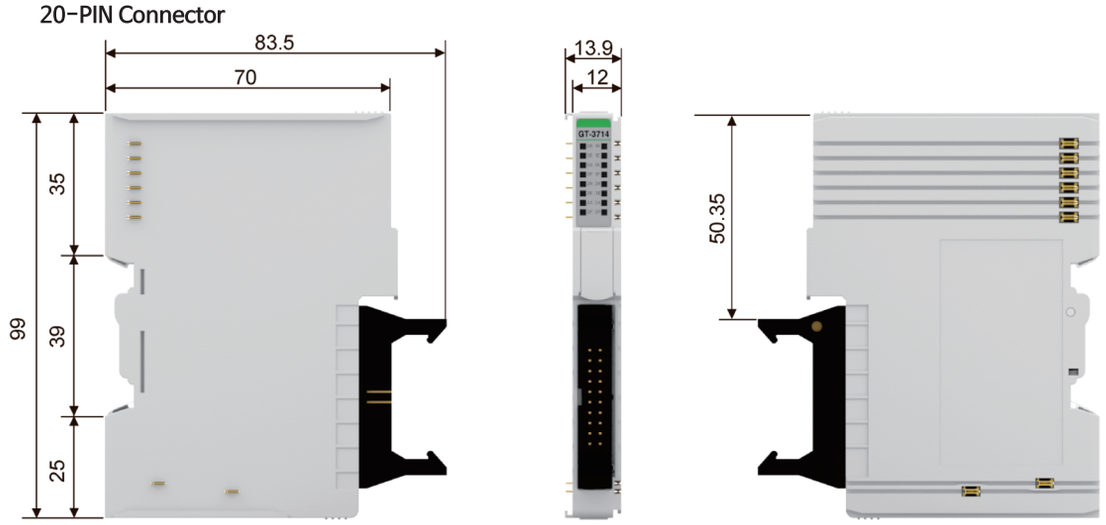

40-PIN Connector

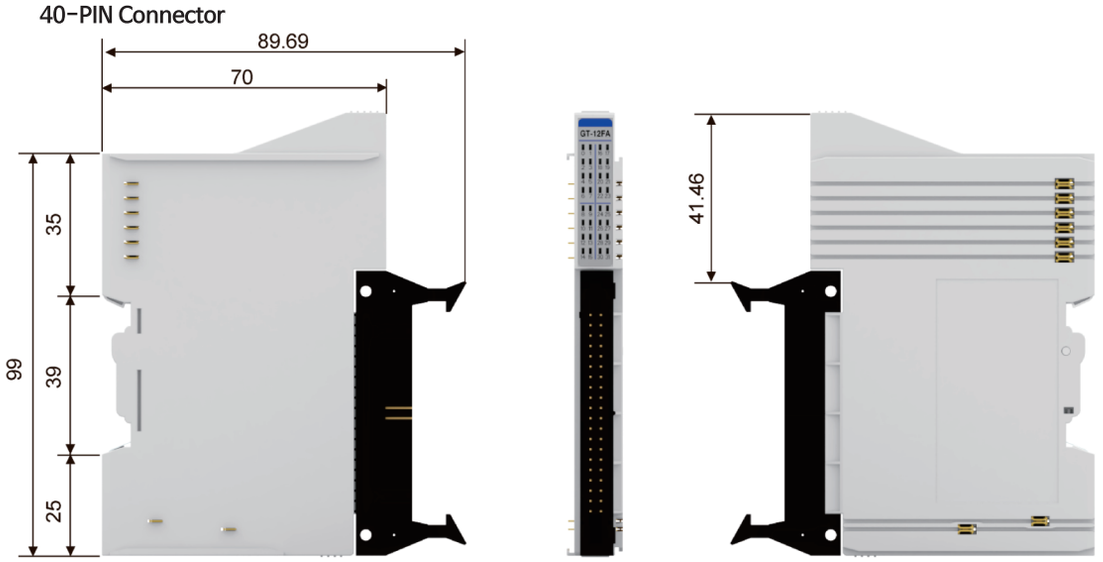

Documentation offered by your distributor

CREVIS. Co.,Ltd.

www.crevis.co.kr

경기도 용인시 기흥구 기곡로 29-4 (17099)
대표번호 : 031-899-4599
제어기 영업 : 031-289-3321, 3326 (Kor)
카메라 영업 : 031-289-3322, 3324
팩스번호 : 031-899-4509
E-mail : crevis@crevis.co.kr

29-4, Gigokro, Giheunggu, Yonginsi, 17099, Korea
Tel : +82-31-899-4599
Controller sales : +82-31-289-4515, 4516
Camera sales : +82-31-289-3322, 3324
Fax : +82-31-899-4509
E-mail : crevis@crevis.co.kr